C40

40/45/50s/55s

IC-PNEUMATIC LPG/DIESEL
8000 / 9000 / 10,000 / 11,000 lbs.
(4000 / 4500 / 5000 / 5500 kg)

GEN 2

CLARK®
THE FORKLIFT

- Low effort **hydrostatic power steering** provides the operator with excellent maneuverability and ease of control.

- Low, open foot step with **traction plate** makes entry/exit quick, easy and safe.

Rugged Durability and High Performance in Demanding Applications

The **NEW** GEN2 C40-series is designed to tackle any task placed in its path. The open-core, plate-fin radiator provides **maximum cooling of the engine and transmission in the harshest environments** and the most demanding applications.

98%

Engineered for extreme environments, the C40-series is equipped with a two-stage air filter system that removes 98% of incoming dust and debris before it enters the filter media.

- Nested upright rails provide positive rail interlock and a narrow "column" to **maximize the vision window**. The overhead guard safety bars run parallel to the operator's line of sight resulting in **a clear, unobstructed view**.

Maximum Visibility + Minimum Fatigue = **Increased Safety** & **Product Integrity**

C40 STANDARD FEATURES & BENEFITS

PARKING BRAKE

- **Simple & Error Proof**
  - Hand operated lever actuates brake.
  - Transmission disengages when parking brake is set preventing driving against park brake.
  - Horn will sound if brake is not set after 3 seconds.

WET DISC BRAKES ON ALL C40 MODELS

- **Enclosed & Oil Cooled**
  - For smooth, quiet operation.
  - Minimal wear promotes long life.
  - Reduced maintenance means less downtime.
- **Power Assist Design**
  - Low pedal effort reduces operator fatigue.
- **36 months / 10,000 hour warranty on brake discs**

THE POWER BEHIND THE PUNCH

- **Field-Proven 4.3 L V-6 GM LPG Engine**
  - Computer-controlled fuel system.
- **3.6 L Turbocharged Deutz Diesel Engine**
  - Tier-4 Final.
- **3.8 L Turbocharged Kubota Diesel Engine**
  - Tier-3.
- **Auto Shut-Down**
  - Protects your investment in the event of low engine oil pressure, excessive engine coolant or high transmission oil temperatures.
- **EPA Compliant**
  - Engines meet reduced emission and smoke levels.

Available Equipment

- Double auxiliary valve
- Hose adaptations
- Hydraulic control options
- Side shifters
- Strobe lights
- Reverse Alarm
- Rear work light
- Mirrors
- Cloth suspension seat
- Turn, stop and backup lights
- LPG
- Various tire options

EASE OF MAINTENANCE

- **Service Access is Simple**
  - Seat Deck raises for easy access to both sides of engine revealing hydraulic & transmission components.

RUGGED CONSTRUCTION

UPRIGHT AND CARRIAGE

- **I-Beam style upright**
  - Rails are designed to be 55% stiffer than conventional flat-faced rails.
  - Better resistance to side-to-side deflection.
  - Promotes longer life and improved stability with elevated loads.
- **Hydraulic Cushioning Valves**
  - Silent staging reduces shock & vibration.
- **Shimmable, Sealed & Canted Load Rollers**
  - Carriage has 6 load rollers & side thrust rollers* *2 on Class-III and 4 on Class-IV.
  - Maximize load distribution and reduce free play.

STEERING AXLE

- "Double shear" design linkage pivot pins and tapered roller king-pin bearings withstand impact without loosening or breaking.

ONE-PIECE FRAME

- Heavy duty, welded, and formed steel plate design protects from impact damage and extends the life of the truck.

HYDRAULIC SYSTEM

- **Maximum Horsepower**
  - Uses a load-sensing flow control valve for steering to reduce horsepower loss and heat buildup.
- **Optimum Performance Of Attachments**
  - The main hydraulic valve incorporates adjustable flow controls for tilt and auxiliary functions.
- **Sectional Design**
  - Allows for easy addition of extra functions and simplifies service.
- **Upright Mounted Load Lowering Valve**
  - Controlled lowering independent of engine speed.

OPERATOR COMPARTMENT

- **CLARK Vinyl Safety Seat**
  - 6" fore / aft adjustment .
  - Molded for support.
  - Non-cinching, retractable seat belt.
  - Standard weight adjustment and full-suspension.
- **Operator Presence Sensing System**
  - Hydraulic and transmission functions disengage when operator leaves seat.
- **Thick Molded Floor Mat**
  - Reduces vibration and noise level.
  - Improves operator comfort.
- **Hood Mounted Hydraulic Controls**
  - Located and sized for ease of use.
- **Low cowl design**
  - Greatly increases visibility of forks and load.
- **Tilt Steering Column**
  - Adjusts to suit operator & provides easier entry/exit.

GENERAL DATA & STANDARD DIMENSIONS

Upright Table

Maximum Fork Height in	mm	Overall Height[1,4] Lowered in	mm	in	Free Lift[3] mm	Standard Tilt Spec[2] B°/F°
C40/45/50s Standard						
98	2500	78.1	1984	6.1	156	8/8
106	2700	82.0	2084	6.1	156	8/8
118	3000	87.9	2235	6.1	156	10/8
• 130	3300	93.8	2384	6.1	156	10/8
138	3500	97.8	2484	6.1	156	10/8
146	3700	101.7	2584	6.1	156	10/8
157	4000	107.6	2734	6.1	156	5/6
177	4500	117.5	2984	6.1	156	5/6
196	5000	127.3	3234	6.1	156	5/6
C40/45/50s Triple Stage						
146	3700	79.4	2016	50.4	1279	5/6
157	4000	83.3	2116	54.3	1379	5/6
169	4300	87.2	2216	58.2	1479	5/6
• 177	4500	89.9	2283	60.9	1546	5/6
189	4800	93.8	2383	64.8	1646	5/6
197	5000	96.5	2450	67.4	1713	5/3
216	5500	103.0	2617	74.0	1880	5/3
236	6000	109.6	2784	80.6	2047	3/3
256	6500	116.2	2951	87.2	2214	3/3
275	7000	122.8	3118	93.7	2381	3/3
C40/45/50s Hi-Lo						
106	2700	84.0	2133	55.0	1396	8/8
• 118	3000	89.9	2283	60.7	1546	10/8
130	3300	95.8	2433	66.8	1696	10/8
C55s Standard						
98	2500	80.9	2056	6.5	166	8/8
110	2800	86.9	2206	6.5	166	10/8
122	3100	92.8	2356	6.5	166	10/8
• 130	3300	96.7	2456	6.5	166	10/8
138	3500	100.6	2556	6.5	166	10/8
150	3800	106.5	2706	6.5	166	5/6
169	4300	116.7	2956	6.5	166	5/6
189	4800	126.2	3206	6.5	166	5/3
C55s Triple Stage						
138	3500	78.3	1988	42.0	1068	5/6
150	3800	82.2	2088	46.0	1168	5/6
161	4100	86.1	2188	49.9	1268	5/6
• 169	4300	88.8	2255	52.6	1335	5/6
181	4600	92.7	2355	56.5	1435	5/6
189	4800	95.4	2422	59.1	1502	5/3
208	5300	101.9	2589	65.7	1669	5/3
228	5800	108.5	2756	72.3	1836	3/3
248	6300	115.1	2923	78.9	2003	3/3
268	6800	121.7	3090	85.4	2170	3/3
C55s Hi-Lo						
102	2600	82.9	2105	46.7	1185	8/8
• 114	2900	88.8	2255	52.6	1335	10/8
126	3200	94.7	2405	58.5	1485	10/8

Grade Clearance

Model	A%	B%
C40/45 – Single Drive	30	30
C40/45 – Dual Drive	31	26
C50s/55s – Single Drive	30	29
C50s/55s – Dual Drive	31	25

• Indicates preferred common specification.
[1] For overall height raised with load backrest, add 48 in. (1220 mm) to maximum fork height.
[2] Standard tilt shown. Contact a Clark representative for information on optional tilt.
[3] Freelift dimensions shown are without load backrest.
[4] For overall height lowered with dual drive on C40, C45 & C50s, deduct 1.1" (28 mm). C55s is shown with dual drive

Other uprights available, contact a Clark representative.

Notes

Production engines and driveline components may vary in output and/or efficiency by ±5%. The performance shown represents nominal values which may be obtained under typical operating conditions of a machine.

ANSI/ITSDF and Insurance Classification

Standard truck meets all applicable mandatory requirements of Part III-ANSI/ITSDF B56.1 Safety Standard for Powered Industrial Trucks and Underwriters Laboratories requirements as to fire hazard only for D and LP classifications. For further information contact a Clark representative.

Users should be aware of, and adhere to, applicable codes and regulations regarding operator training, use, operation and maintenance of powered industrial trucks, including:
- ANSI/ITSDF B56.1
- NFPA 505, fire safety standard for powered industrial trucks - type designations, areas of use, maintenance and operation.
- Occupational Safety and Health Administration (OSHA) regulations that may apply.

Contact your authorized CLARK forklift truck dealer for further information including operator training programs and auxiliary visual and audible warning systems, fire extinguishers, etc., as available for specific user applications and requirements.

Specifications, equipment, technical data, photos and illustrations are based on information at time of printing and are subject to change without notice. Some products may be shown with optional equipment.

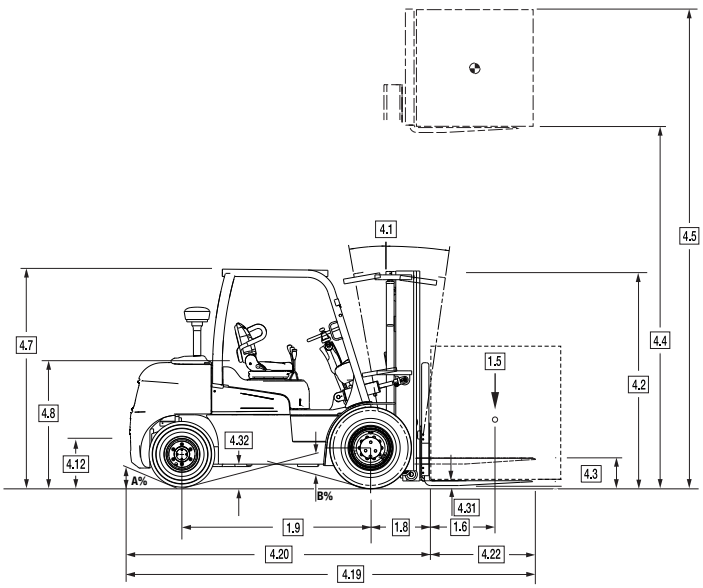

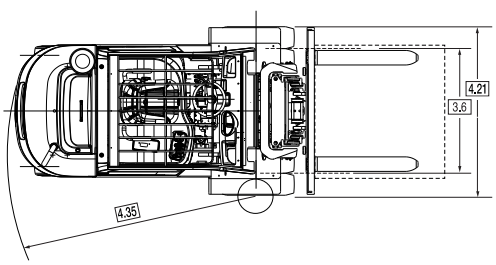

For corresponding data see Specification Chart

STANDARD SPECIFICATIONS

Specifications	1.1	Manufacturer		Clark	Clark	Clark
	1.2	Manufacturer's Designation		C40D	C45D	C50sD
	1.3	Drive unit Diesel, L.P. Gas		Diesel Deutz **I** Kubota	Diesel Deutz **I** Kubota	Diesel Deutz **I** Kubota
	1.4	Operator type stand on / driver seated		Driver Seated	Driver Seated	Driver Seated
	1.5	Load capacity / rated load	lbs(kg)	8000 (4000)	9000 (4500)	10,000 (5000)
	1.6	Load center distance	in(mm)	24 (500)	24 (500)	24 (500)
	1.8	Load center distance, center of drive axle to fork face[1]	in(mm)	22.6 (573)	22.6 (573)	22.6 (573)
	1.9	Wheelbase	in(mm)	76.8 (1950)	76.8 (1950)	82.7 (2100)
Weight	2.1	Service weight	lbs(kg)	**D**:13,367 (6062)/**K**:13,197 (5986)	**D**:14,191 (6436)/**K**:14,021 (6360)	**D**:15,887 (7205)/**K**:15,717 (7129)
	2.2	Axle loading, loaded front / rear	lbs(kg)	**D**:19,607/2,580 (8892/1170) **K**:19,493/2,520 (8842/1143)	**D**:21,294/2,820 (9657/1279) **K**:21,180/2,762 (9607/1253)	**D**:23,920/2,992 (10848/1357) **K**:23,805/2,936 (10798/1332)
	2.3	Axle loading, unloaded front / rear	lbs(kg)	**D**:5,898/7,466 (2675/3386) **K**:5,822/7,372 (2641/3344)	**D**:5,868/8,322 (2661/3774) **K**:5,798/8,221 (2630/3729)	**D**:7,093/8,794 (3217/3988) **K**:7,017/8,739 (3183/3946)
Tires	3.1	Tire type, P = pneumatic, SE = solid pneu, C = cushion		P	P	P
	3.2	Tire size, front	in	8.25X15-14PR	8.25X15-16PR	7.50X15-12PR
	3.3	Tire size, rear	in	7.00X12-14PR	7.00X12-14PR	7.00X12-14PR
	3.5	Wheels, number front / rear (x = drive wheels)		2x/2	2x/2	4x/2
	3.6	Tread, front	in(mm)	45.9 (1165)	45.9 (1165)	50.7 (1288)
	3.7	Tread, rear	in(mm)	44.6 (1134)	44.6 (1134)	44.6 (1134)
Dimensions	4.1	Tilt of upright / fork carriage, back / forward	degrees	10B / 8F	10B / 8F	10B / 8F
	4.2	Height, upright lowered[2,3]	in(mm)	87.9 (2234)	87.9 (2234)	86.9 (2207)
	4.3	Freelift	in(mm)	6.1 (156)	6.1 (156)	6.1 (156)
	4.4	Lift height[4]	in(mm)	118 (3000)	118 (3000)	118 (3000)
	4.5	Height, upright extended (includes LBR)	in(mm)	166 (4216)	166 (4216)	166 (4216)
	4.7	Height overhead guard[2,3]	in(mm)	91.5 (2324)	91.5 (2324)	90.4 (2226)
	4.8	Seat height	in(mm)	49.8 (1265)	49.8 (1265)	49.8 (1265)
	4.12	Coupling height	in(mm)	18.1 (460)	18.1 (460)	18.1 (460)
	4.19	Overall length[1]	in(mm)	161.9 (4113)	163.9 (4163)	175.3 (4453)
	4.20	Length to face of forks[1]	in(mm)	119.8 (3043)	121.8 (3093)	127.3 (3233)
	4.21	Width	in(mm)	55.1 (1400)	55.1 (1400)	68.6 (1742)
	4.22	Fork dimensions	in(mm)	2x5x48 (50x122x1220)	2x5x48 (50x122x1220)	2x6x48 (50x150x1220)
	4.23	Fork carriage		Hook Type	Hook Type	Hook Type
	4.24	Fork carriage width	in(mm)	53 (1348)	53 (1348)	66 (1678)
	4.31	Ground clearance minimum, loaded	in(mm)	6.7 (169)	6.7 (169)	5.6 (142)
	4.32	Ground clearance center of wheelbase	in(mm)	8.3 (212)	8.3 (212)	7.3 (185)
	4.34	Right Angle Stack (add load length and clearance)	in(mm)	134.5 (3416)	135.9 (3451)	141.9 (3605)
	4.35	Outside turning radius	in(mm)	111.9 (2843)	113.3 (2878)	119.4 (3032)
	4.36	Inside turning radius	in(mm)	11.0 (280)	11.0 (280)	5.9 (150)
Performance	5.1	Travel speed loaded / unloaded	mph (kph)	**D**:13.7/14.4 (22.0/23.2) **K**:15.5/16.2 (25.0/26.0)	**D**:13.5/14.4 (21.8/23.2) **K**:15.4/16.2 (24.8/26.0)	**D**:12.6/13.4 (20.3/21.6) **K**:14.9/15.8 (24.0/25.5)
	5.2	Lift speed loaded / unloaded	fpm(ms)	**D**:108.2/112.2 (0.55/0.57) **K**:102.4/110.2 (0.52/0.56)	**D**:104.3/112.2 (0.53/0.57) **K**:100.4/110.2 (0.51/0.56)	**D**:98.4/112.2 (0.50/0.57) **K**:98.4/110.2 (0.50/0.56)
	5.3	Lowering speed loaded / unloaded	fpm(ms)	98.4/92.5 (0.50/0.47)	98.4/92.5 (0.50/0.47)	98.4/92.5 (0.50/0.47)
	5.6	Max. drawbar pull loaded / unloaded	lbs(N)	**D**:8481/2862 (337726/12729) **K**:9303.5/2861.6 (41384/12729)	**D**:8508/2833 (37844/12602) **K**:9790.7/2835.1 (43551/12611)	**D**:9101/3481 (40482/15485) **K**:10048.7/3481.2 (44699/15485)
	5.8	Max. gradeability loaded / unloaded	%	**D**::37.4/21.4 / **K**:52.2/21.4	**D**:33.9/20.1 / **K**:47.1/20.1	**D**:32.1/21.8 / **K**:42.3/21.8
	5.10	Service brake		Wet Disc Brake	Wet Disc Brake	Wet Disc Brake
Drive Line	7.1	Manufacturer / Type		**D**: TD3.6 L4[5] / **K**:V3800T[5]	**D**:TD3.6 L4[5] / **K**:V3800T[5]	**D**:TD3.6 L4[5] / **K**:V3800T[5]
	7.2	Rated output per SAE J1349	HP/kW	**D**:74.3 (55.4) / **K**:92.0 (68.6)	**D**:74.3 (55.4) / **K**:92.0 (68.6)	**D**:74.3 (55.4) / **K**:92.0 (68.6)
	7.3	Rated speed	rpm	**D**:2200 / **K**:2400	**D**:2200 / **K**:2400	**D**:2200 / **K**:2400
	7.4	No. of cylinders / displacement	#/cu. in. (Liters)	**D**:4/220 (3.6) / **K**:4/230 (3.8)	**D**:4/220 (3.6) / **K**:4/230 (3.8)	**D**:4/220 (3.6) / **K**:4/230 (3.8)
	8.2	Operating pressure for attachments	psi/bar	Adjustable	Adjustable	Adjustable
	8.4	Sound level, driver's ear per ISO 12053	dB(A)	80.6	80.6	80.6

Notes
1. Add 1.4" (34mm) for Triple Stage Upright
2. C40 & C45 shown with single-drive, deduct 1.1" (27mm) for dual-drive.
3. C50s & C55s shown with dual-drive, add 1.4" (36mm) for single-drive.
4. C40/45/50 shown with 118" standard upright. C55 shown with 110" standard upright.
5. Not compatible with high sulfur diesel fuel. Sulfur content must be less than 0.10% (1000 ppm).

D:Deutz / **K**:Kubota

C40/45/50s/55s

Clark	Clark	Clark	Clark	Clark
C55sD	C40L	C45L	C50sL	C55sL
Diesel Deutz **I** Kubota	LPG	LPG	LPG	LPG
Driver Seated	Driver Seated	Driver Seated	Driver Seated	Driver Seated
11,000 (5500)	8000 (4000)	9000 (4500)	10,000 (5000)	11,000 (5500)
24 (500)	24 (500)	24 (500)	24 (500)	24 (500)
23.5 (598)	22.6 (573)	22.6 (573)	22.6 (573)	23.5 (598)
82.7 (2100)	76.8 (1950)	76.8 (1950)	82.7 (2100)	82.7 (2100)
D:16,857 (7645)/**K**:16,687 (7569)	12,860 (5833)	13,684 (6207)	15,382 (6977)	16,352 (7417)
D:25,704/3,281 (11657/1488) **K**:25,324/3,488 (11487/1582)	19,288/2,390 (8749/1084)	20,972/2,632 (9513/1194)	23,592/2,813 (10701/1276)	25,324/3,488 (11487/1582)
D:6,930/9,927 (3143/4502) **K**:6,861/9,826 (3112/4457)	5,617/7,242 (2548/3285)	5,593/8,091 (2537/3670)	6,806/8,576 (3087/3890)	6,645/9,707 (3014/4403)
P	P	P	P	P
7.50X15-12PR	8.25X15-14PR	8.25X15-16PR	7.50X15-12PR	7.50X15-12PR
7.00X12-14PR	7.00X12-14PR	7.00X12-14PR	7.00X12-14PR	7.00X12-14PR
4x/2	2x/2	2x/2	4x/2	4x/2
50.7 (1288)	45.9 (1165)	45.9 (1165)	50.7 (1288)	50.7 (1288)
44.6 (1134)	44.6 (1134)	44.6 (1134)	44.6 (1134)	44.6 (1134)
10B / 8F	10B / 8F	10B / 8F	10B / 8F	10B / 8F
86.9 (2207)	87.9 (2234)	87.9 (2234)	86.9 (2207)	86.9 (2207)
6.5 (166)	6.1 (156)	6.1 (156)	6.1 (156)	6.5 (166)
110 (2800)	118 (3000)	118 (3000)	118 (3000)	110 (2800)
158 (4013)	166 (4216)	166 (4216)	166 (4216)	158 (4013)
90.4 (2226)	91.5 (2324)	91.5 (2324)	90.4 (2226)	90.4 (2226)
49.8 (1265)	49.8 (1265)	49.8 (1265)	49.8 (1265)	49.8 (1265)
18.1 (460)	18.1 (460)	18.1 (460)	18.1 (460)	18.1 (460)
178.5 (4533)	161.9 (4113)	163.9 (4163)	175.3 (4453)	178.5 (4533)
130.4 (3313)	119.8 (3043)	121.8 (3093)	127.3 (3233)	130.4 (3313)
68.6 (1742)	55.1 (1400)	55.1 (1400)	68.6 (1742)	68.6 (1742)
2x6x48 (50x150x1220)	2x5x48 (50x122x1220)	2x5x48 (50x122x1220)	2x6x48 (50x150x1220)	2x6x48 (50x150x1220)
Hook Type	Hook Type	Hook Type	Hook Type	Hook Type
66 (1678)	53 (1348)	53 (1348)	66 (1678)	66 (1678)
5.6 (142)	6.7 (169)	6.7 (169)	5.6 (142)	5.6 (142)
7.3 (185)	8.3 (212)	8.3 (212)	7.3 (185)	7.3 (185)
144.4 (3669)	134.5 (3416)	135.9 (3451)	141.9 (3605)	144.4 (3669)
120.9 (3071)	111.9 (2843)	113.3 (2878)	119.4 (3032)	120.9 (3071)
5.9 (150)	11.0 (280)	11.0 (280)	5.9 (150)	5.9 (150)
D:12.6/13.4 (20.2/21.6) **K**:14.9/15.8 (23.9/25.5)	12.6/13.4 (20.2/21.5)	12.4/13.4 (20.0/21.5)	13.5/12.4 (21.7/20.0)	13.5/12.4 (21.7/20.0)
D:94.5/112.2 (0.48/0.57) **K**:96.5/110.2 (0.49/0.56)	96.5/100.4 (0.49/0.51)	94.5/100.4 (0.48/0.51)	94.5/100.4 (0.48/0.51)	92.5/98.4 (0.47/0.50)
98.4/92.5 (0.50/0.47)	98.4/92.5 (0.50/0.47)	98.4/92.5 (0.50/0.47)	98.4/92.5 (0.50/0.47)	98.4/92.5 (0.50/0.47)
D:9098/3377 (40472/15024) **K**:10051.0/3379.8 (44709/15034)	8229.8/2758.0 (36608/12268)	8262.9/2724.9 (36755/12121)	8714.9/3373.0 (38766/15004)	8712.7/3269.4 (38756/14543)
D:39.4/20.1 / **K**:38.7/20.1	43.3/21.1	39.2/19.8	36.5/21.8	33.4/20.0
Wet Disc Brake	Wet Disc Brake	Wet Disc Brake	Wet Disc Brake	Wet Disc Brake
D:TD3.6 L4[5] / **K**:V3800T[5]	GM V6 4.3L	GM V6 4.3L	GM V6 4.3L	GM V6 4.3L
D:74.3 (55.4) / **K**:92.0 (68.6)	109.9 (82)	109.9 (82)	109.9 (82)	109.9 (82)
D:2200 / **K**:2400	2400	2400	2400	2400
D:4/220 (3.6) / **K**:4/230 (3.8)	6 / 262 (4.3)	6 / 262 (4.3)	6 / 262 (4.3)	6 / 262 (4.3)
Adjustable	Adjustable	Adjustable	Adjustable	Adjustable
80.6	83	83	83	83

& Don't Forget...

Safety Starts With You!

Before operating a lift truck, an operator must:

- Be trained and authorized
- Read and understand operator's manual
- Not operate a faulty lift truck
- Not repair a lift truck unless trained and authorized
- Have the overhead guard and load backrest extension in place
- Perform daily inspections

During operation, a lift truck operator must:

- Wear a seat belt
- Keep entire body inside truck cab
- Never carry passengers or lift people
- Keep truck away from people and obstructions
- Travel with lift mechanism as low as possible and tilted back
- Allow safe stopping distance and come to a complete stop before leaving operator compartment

To park a lift truck, an operator must:

- Completely lower forks or attachments
- Shift into neutral
- Turn key off
- Set parking brake

- We don't just build forklifts. As a company, we are also focused on providing our customers with the best possible technical service support and aftermarket parts available.

- Even though our business starts with a quality, cost-effective product, our organization understands that it is the support and services we provide after the sale that help keep your business running at peak efficiency.

- **THE CLARK PartsPRO® SYSTEM** is our industry-leading electronic parts and service documentation tool that provides dealers with a quick and accurate method of identifying parts for every CLARK forklift built since 1961. PartsPRO® ensures the availability of the most current technical information and has the unique capability to create parts manuals specific to your mixed CLARK fleet, making it simple to positively identify and order the correct part(s) from your local CLARK dealer. The right CLARK part —
The First Time, Every Time.

- **UNRIVALED PARTS SUPPORT** Our Aftermarket Distribution Center provides parts to over 250 North American CLARK dealers and many international dealers. This CLARK operated 184,000 square foot facility is dedicated to supporting the CLARK models built over the last 90 years. This facility is focused on providing excellent off-the-shelf availability, quality parts, quick response time and competitive pricing.

DEPENDABLE PARTS = DEPENDABLE TRUCKS

CLARK parts

BUILT TO LAST.®

CLARK THE FORKLIFT

CLARK MATERIAL HANDLING COMPANY
North American Headquarters
700 Enterprise Drive • Lexington, KY 40510
866-252-5275 • **www.clarkmhc.com**

C40/45/50S/55S
59-894-0421 Printed in USA MP02125M

© 2013 CLARK Material Handling Company