A series Mini Walkie Pallet Truck

with capacities of 3,000lbs

The World of Hangcha

HANGCHA
AMERICA

A series Mini Walkie Pallet Truck

The A series Mini Walkie Pallet Truck has been engineered to be both powerful and flexible to meet the requirements of many demanding applications. Whether it's supermarket work, delivery service, stock replenishment or heavy manufacturing, the A series Mini Walkie Pallet Truck has the strength and durability to minimise your total cost of ownership.

Easy/ Efficiency/ Economy

Appearance

/ A series Mini Walkie Pallet Truck applied professional industrial design, stream lines, and compact, and fully ergonomic consideration, in line with the latest design trends.

/ Applied steel stamping and injection molding processes, which is robust, durable, and also environmental compliance.

High Performance

/ Rated capacity 3000lb, meet the needs of the majority of customers.
/ Powered by traction motor not only has good acceleration and perfect performance, but also low heat.
/ Latest CURTIS control system, precise and smooth.
/ Regenerative braking for battery recovery during travel speed reduction, anti-slope on gradient.
/ All key parts such as tiller, switches, connectors, battery indicator and hour meter all adopt the famous brand.

Comfort

/ Simple and beautiful tiller made by REMA designed to make the operator feel comfortable, all the operation can be completed by one hand.
/ Optimized designing structure to offer a good visibility and easy entrance of the pallet.
/ Built-in charger and maintenance free gel battery adopted to provide convenient usage.
/ The compact body and semicircular design provide an ideal operation in limited space, and the ability of walking upright greatly increases the convenience in the container.
/ Standard fork height 80mm, equipped the guide device easy to get in pallets (including sealing pallets).
/ Side battery change is standard feature.

Reliability

/ 5-pivot design provide longer working life.
/ Imported waterproof connectors, all wires and cables are protected, greatly improve the reliability of the electric system.
/ Top quality hydraulic power unit applied to provide low noise, low vibration, smooth lifting and landing reliable operation.
/ Punch formed forks to provide more strength and tip guide to provide higher efficient operation.
/ Using non-contact proximity switch, improves safety and reliability.

Safety

/ Three braking system of regenerative braking, reverse current braking, parking brake, insures the safe operation.
/ Anti-slope on gradient can keep the safety.
/ The emergency button on the tiller head can effectively avoid the harm to the driver.
/ The standard equipped electronic lifting limitation protect the pump motor from damaging dramatically and more energy saving.

Standard specification

/ Permanent magnet drive motor
/ CURTIS permanent magnet controller
/ Emergency switch
/ Multi-function battery indicator
/ PU wheel
/ 48"mm fork length
/ 27"mm outside fork width
/ Electronic lifting limitation
/ Non-contact proximity switch
/ Till made by REMA
/ Horn
/ Maintenance free battery
/ Internal charger
/ Walking upright
/ Guide device
/ Caster wheel
/ Single load wheel

Options

/ Different length of fork
/ Different width of outside fork
/ Tandem load wheel

Maintenance

/ Built-in charger and maintenance free gel battery, you don't need to worry about them.
/ Integrated battery indicator, hour meter and self-diagnostic instrument.
/ Full opened hood, easy accessibility of all components, is easy for service.
/ All shafts installed lubricated shaft sleeve and oil cup, provide convenient maintenance and long service life.

Rema tiller head

Auxillary wheels are equipped to have better stability

Modern outline design

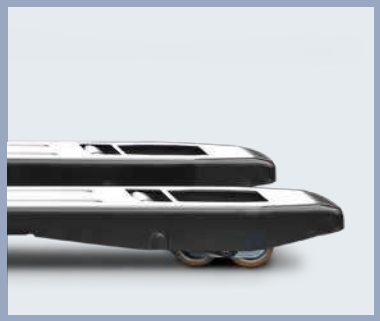

Single load wheel

A series Mini Walkie Pallet Truck

Distinguishing mark	1.1	Manufacturer		**HANGCHA GROUP CO.,LTD.**
		HCFA Model		WP15
	1.2	Manufacturer's type designation		CBD15-A2MC1
	1.4	Operator type: hand, pedestrian, standing, seated, order-picker		Walkie
	1.5	Rated capacity/rated load	Q (kg/lb)	1500/3000
	1.6	Load centre distance	c (mm/in)	600/24
	1.8	Load distance, centre of drive axle to fork	x (mm/in)	960/37.8
	1.9	Wheelbase	y (mm/in)	1285/50.6
Weight	2.1	Service Weight(Including battery)	kg/lb	220/485
		Battery weight	kg/lb	50/110
Tyres, chassis	3.1	Tyres: solid rubber, superelastic, pneumatic, polyurethane		PU
	3.2	Tyre size, front	mm/in	Φ210x70 / Φ8.3x2.8
	3.3	Tyre size, rear	mm/in	2×Φ80x64 / 2×Φ3.1x2.5
	3.4	Additional wheel (dimensions)	mm/in	Φ70x40 / Φ2.8x1.6
	3.5	Wheels, number front / rear (x = driven wheels)		1x+2/4
	3.6	Tread, front	b_{10} (mm/in)	404/15.9
	3.7	Tread, rear	b_{11} (mm/in)	400/15.7
Dimensions	4.4	Lift	h_3 (mm/in)	120/4.7
	4.15	Fork height,lowered	h_{13} (mm/in)	80/3.1
	4.19	Overall length	l_1 (mm/in)	1669/65.7
	4.21	Overall width	b_1 mm (in)	568/688 (22.4/27.1)
	4.22	Fork dimensions	s/e/l mm (in)	50/160/1150 (2.0/6.3/45.3)
	4.25	Distance between fork-arms	b_5 mm (in)	560/680 (22.0/26.8)
	4.32	Ground clearance, centre of wheelbase	m_2 (mm/in)	30/1.2
	4.34.1	Aisle width for pallets 1000 x 1200 crossways	A_{st} (mm/in)	1850/72.8 [1)]
	4.34.2	Aisle width for pallets 800 x 1200 lengthways	A_{st} (mm/in)	1900/74.8 [2)]
	4.35	Turning radius	W_a (mm/in)	1400/55.1 [3)]
Performance data	5.1	Travel speed,laden/unladen	km/h (mph)	4.5/4.9 (2.80/3.04)
	5.2	Lift speed,laden/unladen	m/s (ft/min)	0.050/0.060 (1.97/2.36)
	5.3	Lowering speed,laden/unladen	m/s (ft/min)	0.040/0.045 (1.57/1.77)
	5.8	Max Gradeability,laden/unladen	%	6/15
Electric engine	6.1	Drive motor rating S2 60 min	kW/hp	0.65/0.87
	6.2	Lift motor rating at S3 15%	kW/hp	0.8/1.07
	6.4	Battery voltage,rated capacity	V/Ah	2x12/70
	8.1	Type of drive control		DC
	9.1	Manufacturer		Curtis

Note: 1). VDI 2198: +358/14.1mm/in 2). VDI 2198: +200/7.9mm/in 3). When fork lowered,+60/2.4mm/in

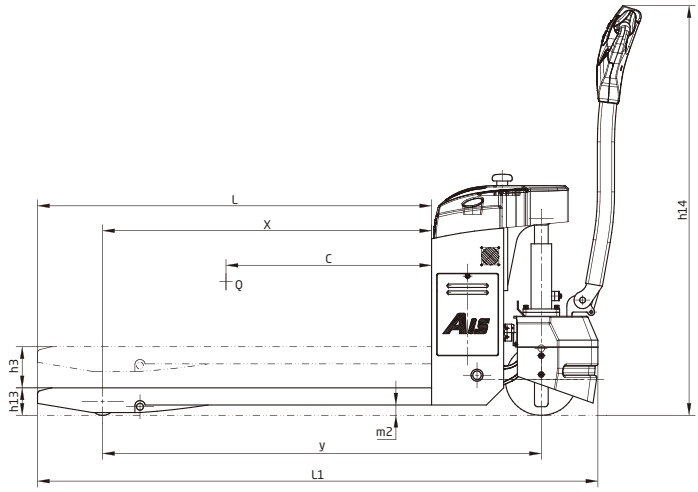

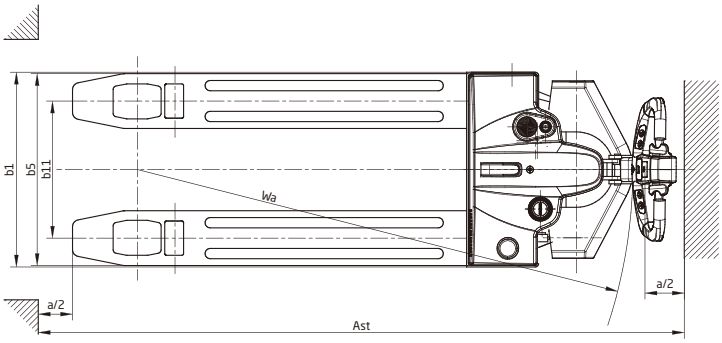

HANGCHA
AMERICA

HC FORKLIFT AMERICA CORPORATION

Company address:
10405-A Granite Street Charlotte,
NC 28273

Toll Free：888-652-8395
Phone：980-888-8335
Fax：980-888-8336

america@hcforklift.com
www.hcforkliftamerica.com

ISO14001:2015

ISO9001:2015

Follow us on Facebook

Follow us on YouTube

Follow us on WeChat

HANGCHA GROUP CO., LTD. reserves the right to make any changes without notice concerning colors, equipment, or specifications detailed in this brochure, or to discontinue individual models. The colors of trucks, delivered may differ slightly from those in brochures.

2019 VERSION 2/COPYRIGHT 2019/12