NOBLELIFT

FE3D32-40N

Warning

Operators should read and understand this manual and all warning labels on the forklift before using the forklift!

Keep the manual for future reference!

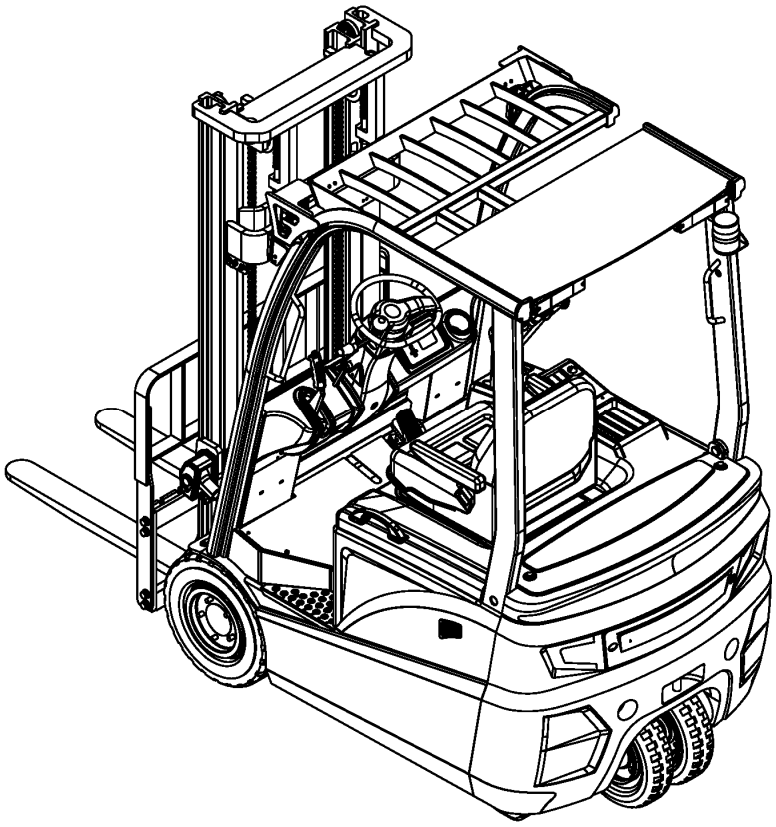

Operation & Maintenance Manual

FE3D32-40 N SERIES

Battery Counterbalanced Forklift Truck

Noblelift Equipment Joint Stock Co.,Ltd

Table of Contents

Introduction…….. 3
I.Attentions Of Using Forklift ……. 4
1.Transportation…… 4
2.Storage……... 4
3.Preparation Before Use……. 4
4.Operation…….. 4
5.Battery Charging…… 5
II.Conformation And Main Performance Parameter Of Forklift…… 6
1.Vehicle Counter Size And Technical Performance Parameter…… 6
1. 1 Outerl Dimension…… 6
1.2 Technical Performance Parameter…….. 7
2.Construction，Principle and Regulation for the Main Parts of Forklift…… 8
⑴ Driving System…….. 8
1.1 Summary……. 8
1.2 Transmission Assembly…… 8
⑵ Brake System……. 9
2.1 Summary…….. 9
2.2 Brake Pedal……... 9
2.3 Main Brake Pump……. 9
2.4 Parking Brake Operating Device…… 10
2.5 Brake Pedal Adjustment……... 10
2.6 Malfunction Analysis…… 11
2.7 Maintenance……. 12
⑶ Steering System…… 13
3.1 Summary…… 13
3.2 Cycloidal Full Hydraulic Redirector…….. 13
3.3 Steering Axle…… 14
3.4 Key Points of Adjusting and Maintenance……... 14
3.5 Inspection after Reassembling of Steering System…… 15
3.6 Malfunction Analysis……. 15
(4) Electrical System…… 15
4.1 Summary…… 15
4.2 Electric Controller…… 17
4.3 Combination Meter…… 18
4.4 Malfunction Analysis……. 20
⑷ Battery…….. 25
5.1 Safety Information Of Battery…… 25
5.2 Usage Attention Of Battery…… 25

5.3 Battery Charging…… 26
5.4 Installation And Replacement Of Battery…….. 28
⑸ Hydraulic System…….. 28
6.1 Summary…… 28
6.2 Oil Pump…… 28
6.3 Multiway Valve……. 28
6.4 Lifting Cylinder and Lifting Chain…… 31
6.5 Speed-Limit Valve…….. 33
6.6 Tilting Cylinder……. 33
6.7 Hydraulic Pipeline……. 34
6.8 Maintenance and Adjusting…… 35
6.9 Malfunction Analysis……. 37
⑹ Lifting System…… 39
7.1 Summary…… 39
7.2 Inner and Outer Mast and Fork Carrier……. 39
7.3 Roller Position…….. 40
7.4 Maintenance and Adjusting…… 40
7.5 Accessaries Installation Instructions……. 42
⑺ Assembling And Disassembling…….. 42
8.1 Attention…… 42
8.2 Hoisting Location For Parts Dismantled…… 42
III. Operation，Usage and Safety of Forklift…… 44
1.Driving and Operation…… 44
① Usage of New Vehicle…… 44
②Relationship between Load and Stability of Forklift…… 44
③Load Center and Load Curve…… 44
④Forklift Stability…… 45
⑤Transportation, Loading and Unloading of Forklift…….. 45
⑥Preparation before Driving…… 45
⑦Driving…….. 46
⑧Park ing and Temporary Park…… 47
⑨Usage of Battery…… 48
⑩Stacking……. 49
⑾Unstacking……. 50
⑿Storage…… 50
2.Usage of Operating Devices…….. 52
①Components，Schematic Diagram Of Operating Devices…….. 52
②Combination Meter…… 52
③Switch…… 52
④Controlling……. 53
⑤Bodywork…….. 56
3.Safety Issue……. 58

①Operation Palce and Working Environment……. 58
②Safety Rules…….. 58
③Transportation of Forklift……. 69
④How to Avoid Overturning,How to Protect Yourself…… 70
⑤Safety Matters during Maintenance…….. 71
⑥Safety Matters when Using Battery…… 73
⑦Label…….. 76
Ⅴ. Routine Check And Maintenance of Forklift……... 77
1.Check Before Operation…… 77
①Checking Points and Checking Contents……. 77
②Checking Procedure……. 78
2.Check after Operation…….. 81
3.Forklift Clean…… 82
①Forklift Surface Clean…… 82
②Chain Clean…… 82
③Electrical System Clean…… 82
④After Cleaning…….. 82
4.Routine Maintenance…… 83
①Routine Maintenance Schedule……. 83
②Routine Replacement Of Main Safety Parts……. 91
5.Lubricating Area and Recommended Grease…… 92
①Lubricating Area…… 92
② Recommended Grease……. 92

Introduction

This manual briefly describes the technical parameters of the counterbalanced accumulator forklift made by our company, and the structure of its main components, working principle and requirements on operation and maintenance. Please read this manual carefully before operation, so as to achieve proper driving and maintenance, and to ensure safe and effective material handling. Meanwhile, this manual aims to guide operators to use the forklift in an appropriate way and to maximize its performance! We hope that operators and equipment managers could read it carefully before use! Please strictly observe the provisions and cautions stipulated in this manual and operate the forklift with caution and care, so that the forklift can be maintained in its best status and optimal performance can be ensured. When you lease or transfer your forklift, always keep this manual with it.

For highlighting purpose, the following icons are used in this manual:

1. ⃠ ----Refers to a potential danger; if not avoided, it may cause serious human injury, vehicle damage or fire.

2. ⚠ ----Refers to a potential danger; if not avoided， it may cause minor human injury, or local damage to the vehicle.。

3. ☞ ----Refers to general cuations and instructions during use.

⚠Most parts of the product are made from recyclable steel. The recycling and disposal of cast-offs resulted during use, maintenance, cleaning and disassembling of the product has to comply with local regulations without pollution to the environment. The recycling and disposal of the cast-offs should only be operated by specialised personnel in the designated area. The cast-offs, such as hydraulic oil, batteries and electronic units, if improperly disposed, may be hazardous to the environment and human health.

Special Declaration:

1）This product is strictly prohibited for potentially explosive hazardous environments.

2）The Noise level of the normal use of this product is compliant with international standards EN 12,053.

3）The vibration level of the normal use of the product is compliant with international standards EN13059.

4）The normal use of the product's environmental requirements as follows: no more than 2000 meters above sea level and the temperature range of-5 ° C - +40 ° c, humidity should no more than 90%.The wind speed is not more than 5m/s.

If you need to use in the freezer for a long time, Or in special environment, it is needed to install special attachments. Please contact our technical staff.

5）Product recall serive is available when serial faulties occur.

☞ Due to continuous product improvement, Noblelift reserves the right to make changes in product designs and specifications without prior notice. For the latest product parameters, please feel free to contact us. All parameters provided herein are as of the publication date of the Instruction Manual.

Ⅰ Attentions of Using Forklift

The operator must always keep in mind the principle of safety first, conscientiously and cautiously read the maintenance manual, following the instruction strictly to make safe and standard operation

1.Transportation

Pay attention to the following particulars when using container or automobile to transport forklift truck

(1) Skid parking brake

(2) Fasten mast and counterweight with steel wire in both two sides, chock the font and back wheels with wedge to proper position

(3) Hoist the forklift according to the lifting indication

2.Storage

(1) Lower the mast to the lowest position

(2) Switch off power, push all the operating rods to neutral position, and pull out power plug

(3) Stretch hand brake rod

(4) Chock front and back wheels with wedge

(5) When truck is in long-term non-use, wheels should be overhead, and battery should be charged once per month

3.Preparation before using

(1) Check all the meters

(2) Check tire pressure

(3) Check the state of each handle and pedal

(4) Check whether the voltage of battery is in operating range, and whether electrolyte specific gravity and the electrolyte level are ok

(5) Check whether the contact of all connectors and plugs of electrical system is ok

(6) Check if the hydraulic liquid，electrolyte or brake fluid is leaking

(7) Check the condition of all main fasteners

(8) Check if the illuminators，signal lamps are ok

(9) Loosen parking brake

(10)Try to lift and lower the mast，tilt forward and backward the mast, turn and brake the truck

(11) Be sure that the class of pollution of hydraulic oil is less than 12 grades

4.Operation

(1) Only the person who has been trained with driver’s license can operate the truck

(2) Operator should wear safe protective shoes, cap, costume during work

(3) Pay attention to the performance and working conditions of mechanical，hydraulic，electrical and mosfet governor when operating

(4)Switch on the power，turn on the key，select the position of direction switch，roll the steering wheel to see if the truck is in order，step down the speed governing pedal slowly，keeping a proper starting acceleration

(5) Check the voltage meter when the truck is in working, if the value stated in the meter is less than 41v, stop working immediately, charge the battery or change another fully charged battery.

(6) During transportation of goods, the load should not exceed the rated capacity, the separation and position of fork should be appropriate, insert the fork completely downside the load, make the load

uniformly distributed on the fork to prevent load from deviation

(7) If the distance between load gravity center and fork carrier is equal or less than 500mm, the maximum load capacity should be rated capacity. If the distance between load gravity center and fork carrier is more than 500mm, the maximum load capacity should be less than rated capacity

(8) When fork is loaded, tilt backwards the mast mostly, the fork carrier should always be contact with goods, lift fork upto 200mm above ground before driving

(9) No standing under fork，no standing on fork when lifting

(10) The starting speed should not be too fast when lifting or lowering the goods

(11) It is not allowed to operate truck and it's additions without sitting on driver's seat

(12) Push handle immediately to middle position when the mast has tilted forward or backward to the extreme position

(13) No driving or turning when the mast is lifting

(14) Pay attention to passers ，obstacles，irregular road and notice the clearance of upper side of forklift when driving

(15) Be careful when moving on slope，when the angle of slope is more than10%，move forward upslope and move backward downslope. No turning on slope，no loading or unloading when moving downslope

（16）Speed-down when turning on the damp or slick road，take care and drive slowly when moving on dock or on temporary board

(17) When operating high lift range truck of which the lifting height is more than 3m，pay attention to the dropping of the load，and take measures to prevent it when necessary

(18) Don't transport unfastened or loosely stacked load，be careful when conveying large-size load

(19) Do not emergency brake when moving with load

(20)When leaving the truck, lower the fork to ground, put lever to neutral position, switch off power，when parking on slope，pull tightly the brake apparatus and chock the wheels with wedge if the parking time is long

(21)The protection valves on multiway valve and on steering device have already been commisoned，so the users shouldn't adjust randomly when using to avoid that the excessively high oil pressure leads to the damage of the whole hydraulic system and burnout of the electric motor

(22) Inflate the tyres according to the pressure value stated in "tire pressure" label

(23) Treat empty truck with additional apparatus as loaded truck

5.Battery charging

(1) During first time charging or boost charging of battery，act strictly according to the rules stated in battery specification

(2) When the forklift is working，if the battery voltage drops to 41v or one cell voltage drops to 1.7v or the meter alarms，stop working immediately，charge the battery or change to another fully charged battery

(3) Check at any moment the specific gravity，the level and the temperature of electrolyte when charging battery

(4) Charge battery as soon as possible after using the forklift, do not store the empty battery for 24h, do not under charge or over charge in order not to damage the battery.

(5) In order to adjust the specific gravity of each cell，make a equalizing charge of the battery in regular service once per month，please refer to the related chapter to get the details of charging method and maintenance

Ⅱ Construction of Forklift and Main Performance Parameter

1. Vehicle Counter Size And Technical Performance Parameter

1.1 Outer Dimension, See Figure 1-1

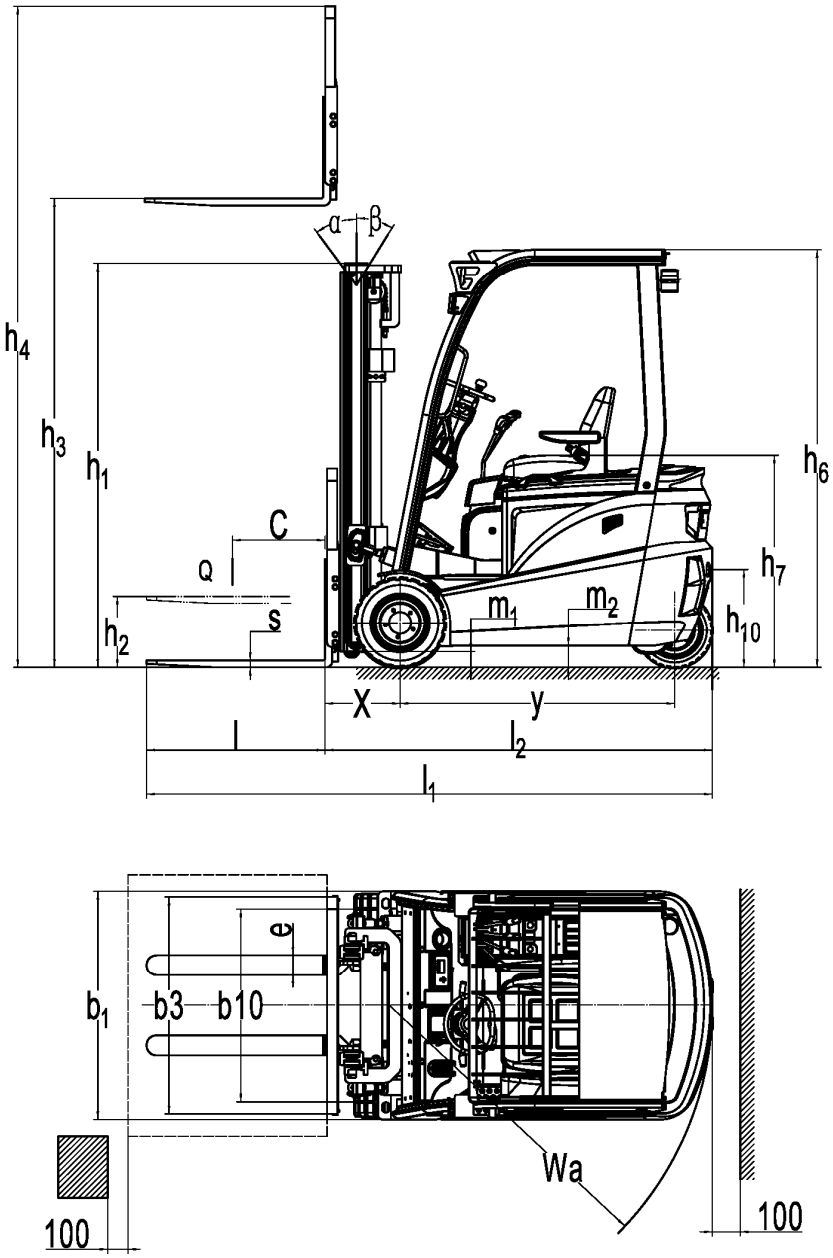

1-1 Outer Dimension

1.2. FE3D35-44N Parameter Table 1-1

Character	1.2	Manufacturer Model		FE3D32	FE3D35	FE3D40
	1.3	Drive Electric(battery or mians), Diesel, Petrol Gas, Manual		Electric	Electric	Electric
	1.4	Operation：Manual, Pedestrian, Standing, Seated, Order-picker		Seated	Seated	Seated
	1.5	Rated Capacity ‘	Q(lbs)	3200	3500	4000
	1.6	Load centre distance:	C(in)	24	24	24
	1.8	Front Overhang	X(in)	14.6	14.8	14.8
	1.9	Wheel Base	Y(in)	53.5	53.5	58.7
Weight	2.1	Self Weight Including Battery	lbs	6732	6952	7524
	2.2	Axle Loading, Loaded Front/Back	lbs	9152/1100	9790/1122	10736/1188
	2.3	Axle Loading, Unloaded Front/Back	lbs	3234/3498	3366/3586	3674/3850
WHeels	3.2	Front Tyre Size	in	18×7-8	18×7-8	200/50-10
	3.3	Back Tyre Size	in	15×41/2 -8	15×41/2 -8	15×41/2 -8
	3.6	Track Width，Front Wheel	B_{10}	37.8	37.8	38.7
	3.7	Track Width，Back Wheel	B_{11}	7.1	7.1	7.1
Basic Dimenstion	4.1	Mast/Fork Carrier Tilt Forward/Backward	A/B	5/7	5/7	5/7
	4.2	Lowered Mast Height	H_1	79.1	79.1	79.1
	4.3	Freelift Height	H_2	4.9	4.9	4.9
	4.4	Lift Height	H_3	118.1	118.1	118.1
	4.5	Extended Mast Height	H_4	156.7	156.7	156.7
	4.7	Overhead Guard Height	H_6	81.7	81.7	81.7
	4.8	Seat Height	H_7	40.6	40.6	40.6
	4.12	Towing Pin Height	H_{10}	18.3	18.3	18.3
	4.19	Overall Length	L_1	112	118.1	123.2
	4.20	Length of Body（Exclude Fork）	L_2	75.8	75.9	81.1
	4.21	Overall Width	B_1/B_2(in)	44.7	44.7	44.7
	4.22	Fork Dimensions	s/e/l	1.4/3.9/36.2	1.6/4.7/42.1	1.6/4.7/42.1
	4.24	Fork Carrier Width	B_3	40.9	40.9	40.9
	4.31	Distance from Lower Part of Mast to the Ground	M_1	4.8	4.8	4.8
	4.32	Distance from Center of Base Wheel to the Ground	M_2	4.1	4.1	4.1
	4.33	Working,1000x1200 Channe 1200 l Width	Ast	122.9	123.1	128.2
	4.35	Turning Radius	Wa	61	61	66.1
	5.1	Moving Speed，Loaded/Unloaded	miine/h	8.7/9.3	8.7/9.3	8.1/9.3
	5.2	Lifting Speed，Loaded/Unloaded	fpm	6.3/8.3	6.3/8.3	6.3/8.3
	5.7	Grade Ability Loaded/Unloaded S,30min	%	15/20	15/20	15/20
Motor	6.1	(S_2 60 Min) Driving Motor Power	hp	6.03*2	6.03*2	6.03*2
	6.2	(S_3 15%) Lifting Motor Power	hp	11.5	11.5	11.5
	6.4	Battery Voltage/Rated Capacity	V/A.H	48/455	48/455	48/560
	6.5	Battery Weight	lbs	1760	1760	2090
Others	8.1	Drive Control Tyep		AC	AC	AC
	8.2	Working Pressure	psl	2537.5	2537.5	2537.5
	8.4	En 12 053 Noise at driver’s ear according to EN 12053		73	73	73

2. **Construction，principle and regulation for the main parts of forklift**

(1). Driving System

1.1 Summary

The drive system consists of two transmission assemblies and two drive motors. The transmission driving gear connect directly to drive motor, the move speed rises with the increment of rotational speed of drive motor, and when the rotational direction of the motor change, the move direction change too

1.2 Transmission Assembly

Transmission assembly assembled directly on frame, one end connected to drive motor, another end connected to tyre, see figure 2-1

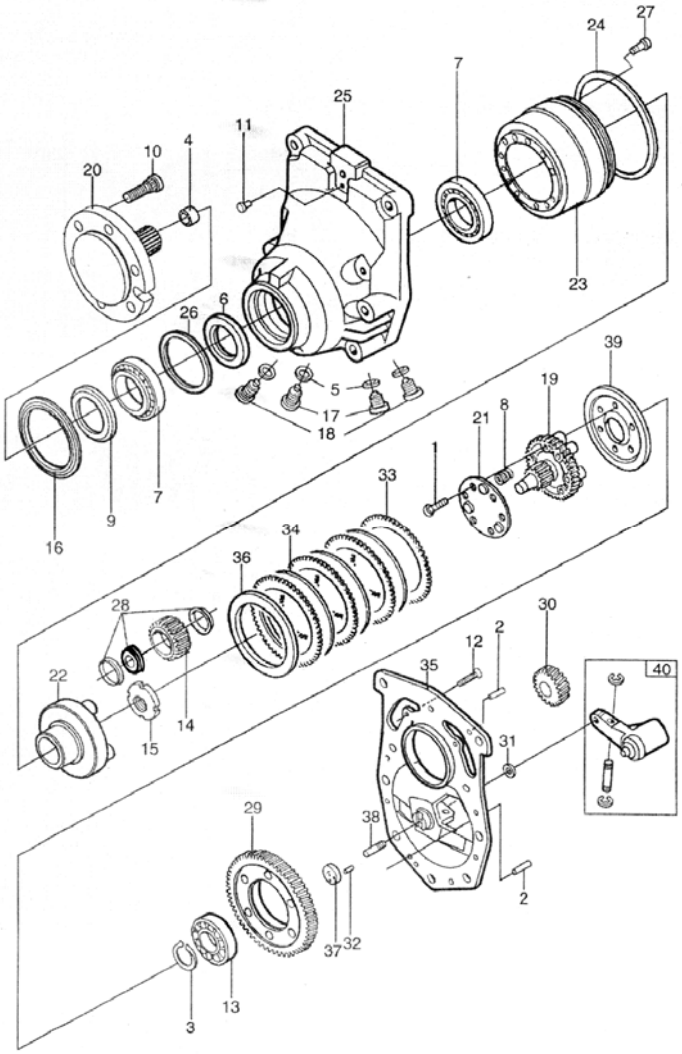

1. hexagonal Screw	2. cylinder Plug	3. Elastic Collar	4. Needle Sleeve	5. Seal Ring
6. Shaft Seal	7. Tapered Roller Bearing	8. Pressure Spring	9. Nylon Ring	10. Bolt

11. Porous Plug	12.Socket-Cap-Screws	13. Deep Groove Ball Bearing	14. Epicyclic Gear	15. Nut
16. O-Ring	17. Plug Screw	18. Magnetic Plug	19.Inner Disc Support	20. Axle
21. Mounting Rack	22. Planet Carrier	23. Internal Tooth	24.Fey Fey-Ring	25. Box
26. Gasket	27. Bolt	28. Cylindrical Bearing	29. Pin Gear	30. Pinion
31. Shaft Seal	32. Round Pin	33.Outer Friction Disk	34.Inner Friction Disk	35. Shell
36. Platen	37. Footstep Bearing	38. Pin	39. Platen	40. Brake Rod

Figure 2-1 Transmission Case

(2) Brake System

2.1 Summary

Brake system is two-front-wheel internal expansion oil pump type，consist of brake pedal，brake master cylinder and wheel brake staff

2.2 Brake Pedal

The construction of brake pedal is illustrated in figure 2-2。The pedal transfer the foot power exerted by pushing rod of brake master cylinder to the pressure of brake oil

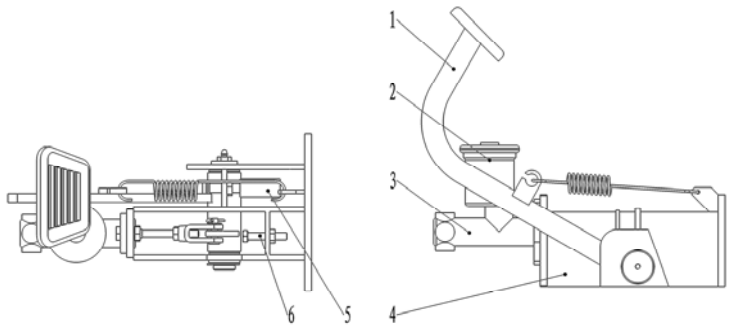

1. Brake Pedal	2. Brake Oil Cup	3. Brake Master Cylinder
4. Brake Support	5. Brake Sensor	6. Stop Bolt

2-2 Brake Pedal Assembly

2.3（figure 2-3）Main Brake Pump(Figure2-3)

Base pump consist of a valve support, a one-way-valve, a return spring and base leather cup, piston，assistant leather cup. The end of the base pump is fixed with lock washer and lock steel wire and the outside of it is protected with rubber dust preventing cover. The base pump work under the assistance of pushing rod by operating brake pedal, step down the brake pedal, the rod pushs the piston, the brake fluid flow back to oilcan through oil return hole until the base leather cup plugs the oil return hole. After the base leather cup push over the oil return hole, the brake fluid of the front cavity of base pump is compressed and

open the one way valve and through brake pipeline flow into subsidiary pump, then, the piston of each subsidiary pump pushes out to make the brake shoe wearing piece get contact with the brake drum，and finally stop the truck or make it slowdown. Now, the back cavity is supplied with the fluid by the brake fluid from oil return hole and oil-in hole. Release the brake pedal，the piston is push backward by the brake shoe return spring，at the same time, the brake fluid in each subsidiary brake pump is compressed by the return spring, which make the brake fluid flow back to base pump through one way valve, the piston returns back to initial position, the brake fluid in base pump flow back to oilcan through oil return hole, one way valve pressure is adjusted in specific gravity to the residual pressure in brake pipeline and subsidiary brake pump, the leather cups in subsidiary pump should be placed correctly to prevent oil leaking and the case of air resistance which possibly occurs in emergency brake

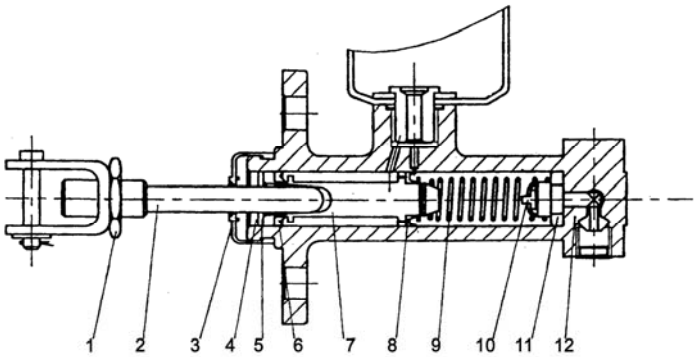

1.Latch Nut	2.PushingRod	3 .Dust Cap	4. Locking Steel Wire
5.Locking Washer	6.Assistant Leather Cup	7.Piston	8.Base Leather Cup
9.Spring	10.One Way Valve	11.Valve Supporter	12.Pump Body

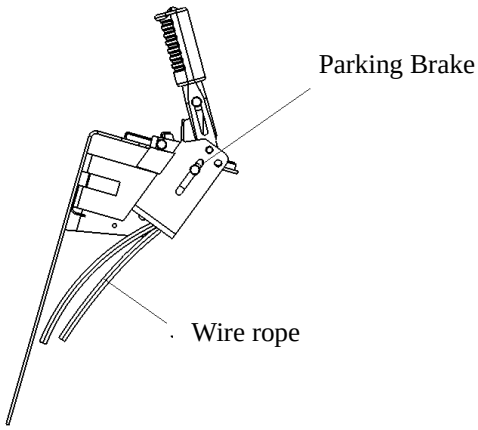

2.4 Parking Brake Operating Device（Figure 2-4）

Parking brake handle is cam structure; adjuster lying at the end of handle is available to adjust the brake force. Turn the adjuster clockwisely，the brake force increase；turn the adjuster counter clockwisely，the brake force decrease

pulling force：Pulling Force 196n～294n

2.5 Brake Pedal Adjustment Figure2-5(A)

(1) Shorten Handspike

(2) Adjust stop bolt of pedal to achieve optimum height of pedal. See Figure 2-5（B）

(3) Stretch handspike until the front end of handspike touch the piston, then, unthread for 1 to 2 circles to make freepath between 10mm-20mm.

(4) Tighten Handspike Nut And Limit Nut Of Pedal

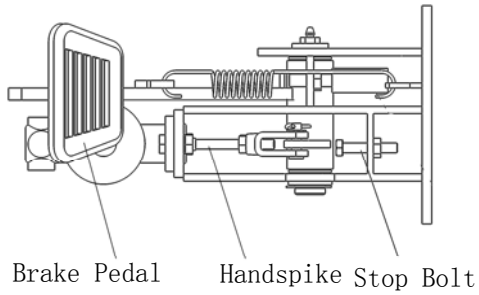

A

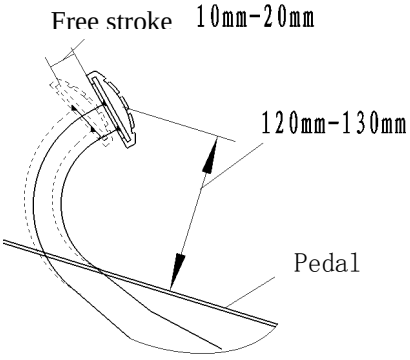

B

(figure2-5)

(5) Adjustment of brake switch. See Figure 2-6

(A) After adjusting of brake pedal height, release lock nut of brake switch

(B) Pull out plug to separate wire

(C) Rotate switch till clearance a=1mm

(D) Ensure that the stoplight light on when step down the pedal.

(E) Tighten the nut

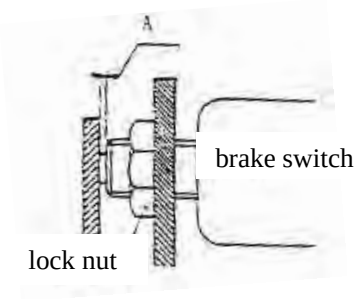

2-6 Brake Lamp Switch

2.6 Malfunction Analysis

2-2

Problem	Cause	Elimination
poor Stop	1 Brake system leakage	Repair
	2 Clearance of brake shoe is not ok	Regulate adjuster
	3 Brake too hot	Check if skid
	4 Bad contact between brake drum and wearing piece	Regulate
	5 Impurity stuck on wearing piece	Repair of replace
	6 Impurity interfused into brake liquid	Check brake liquid
	7 Bad adjustment of foot brake pedal	Regulate
brake Has Noise	1 Case hearding or impurity stuck on wearing piece	Repair or replace
	2 Deformation of motherboard or looseness of bolt	Repair or replace
	3 Deformation of brake shoe or wrong installation	Repair or replace
	4 Wear condition of wearing piece	Replace

	5 Looseness of wheel bearing	Repair or replace
Bad Uniformity Of Brake	1 Grease dirt on wearing piece surface	Repair or replace
	2 Bad adjustment of brake shoe clearance	Regulate adjuster
	3 Sub-pump malfunction	Repair or replace
	4 Damage of rebound spring of brake shoe	Replace
	5 Deviation of brake drum	Repair or replace
	1 Oil leakage of brake system	Repair or replace
	2 Bad adjustment of brake shoe clearance	Regulate adjuster
	3 Air in brake system	Air-bleed
	4 Bad adjustment of brake pedal	Regulate

2.7 Maintenance

①Before running trial of new drive axle you need to infuse gear oil (select gear oil according to the specification strictly). Fill oil into filler located on top of axle shell until oil spill over fuel level hole which located on middle of axle shell.

② The thickness of wearing piece of brake shoe is 8mm normally, it can not be less than 2mm. Check it once per month, replace it immediately when it’s badly worn to prevent accident.

③Technical Maintenance Every 50 Hours

Ⅰ、After 50h working time of new axle, replace the gear oil, clean inner cavity of axle thoroughly before replacing with new gear oil

Ⅱ、Check the tension of all fasteners,if loose, tighten it immediately.

Ⅲ、Check if there is leakage of oil between wheel hub and differential shaft, if there is, recoat airproof glue again.

④Technical Maintenance Every Month:

Ⅰ、Check brake drum to see if there is destructive wear.

Ⅱ、Check the wear condition of brake shoe, if it can not match the operating requirement, replace the brake shoe at once.

Ⅲ、Check if the axle shell is normal, if oil level is less than requested, supply the oil in time

⑤ Technical maintenance semiannually: replace gear oil of axle shell semiannually.

⑥ Technical maintenance yearly: strip inspection once per year

⑦ Check and debug requirement during installation

When driving axle hub is rebuilt，it is necessary to be careful to adjust the brake gap regulator，make the clearance between brake shoe and wearing piece lie in 0.3mm~0.5mm. The conical roller bearing of wheel hub should be infused with100ml of 3#lithium base grease.

Adjust the clearance of bearing of wheel hub. Screw down the inner latch nut until the wheel hub can hardly rotate. Then reverse inner latch nut 1/8 circle. At that time，the brake hub could rotate freely without block and no obvious axial clearance or vibration. Then fit on the locking washer, screw down the outer latch nut in the end.

(3) Steering System

3.1 Summary

Steering system（see figure 2-7）consists of steering wheel, steering shaft, steering device, steering oil pump and steering axle and so on. Steering shaft is connected to steering device by universal joint, connecting shaft connected to steering wheel by universal joint, the steering column can tilt forward and backward to reach a proper position, steering axle installed on the tailbracket of frame, there is a knuckle on both left and right side which can achieve the turning of steering wheel by pushing of piston through connecting rod, to achieve steering.

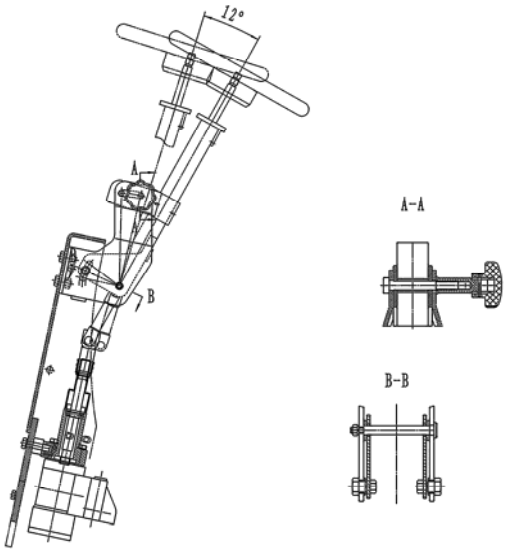

Figure 2-7 Steering Device

3.2 cycloidal Full Hydraulic Redirector

Full hydraulic redirector (figure 2-34) can transfer pressure liquid from pump to oil cylinder according to rotatory angle of steering wheel. When hydraulic system failure, steering operation can be done manually.

Redirector consist of a normal redirector and a assembled valve, the safety valve located on the top cover of assembled valve, also there is a two-way overloading valve in valve body to protect the components when hign pressure generated in hydraulic system caused by impact of outside force to the wheel during moving.both safety valve and two-way overloading valve are regulated by manufacturer, users should not regulate it randomly.

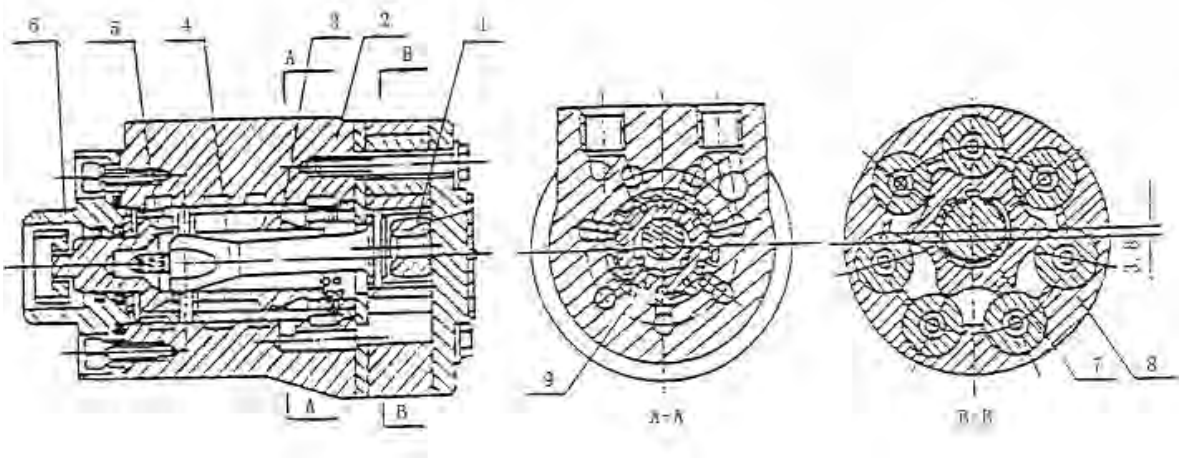

1. Limited Post	4. Universal Driving Shaft	7. Rotor
2. Valve Body	5. Spring Piece	8. Stator
3. Valve Disc	6. Joint Piece	9. Valve Bush

Figure 2-8 Cycloidal Full Hydraulic Redirector

3.3 Steering Axle

Steering axle achieve steering by running of gear shaft, which is driven by the movement of teeth bar pushed by cylinder. Steering axle is fixed on the tail bracket of frame. There is wheel hub on each side of steering axle. Wheel hub is assembled by two conical roller bearings on main axle; wheels are fastened on wheel hub by wheel frame. There are oil seals installed inside of the bearings to keep lubricating grease stay in the cavity of steering knuckle

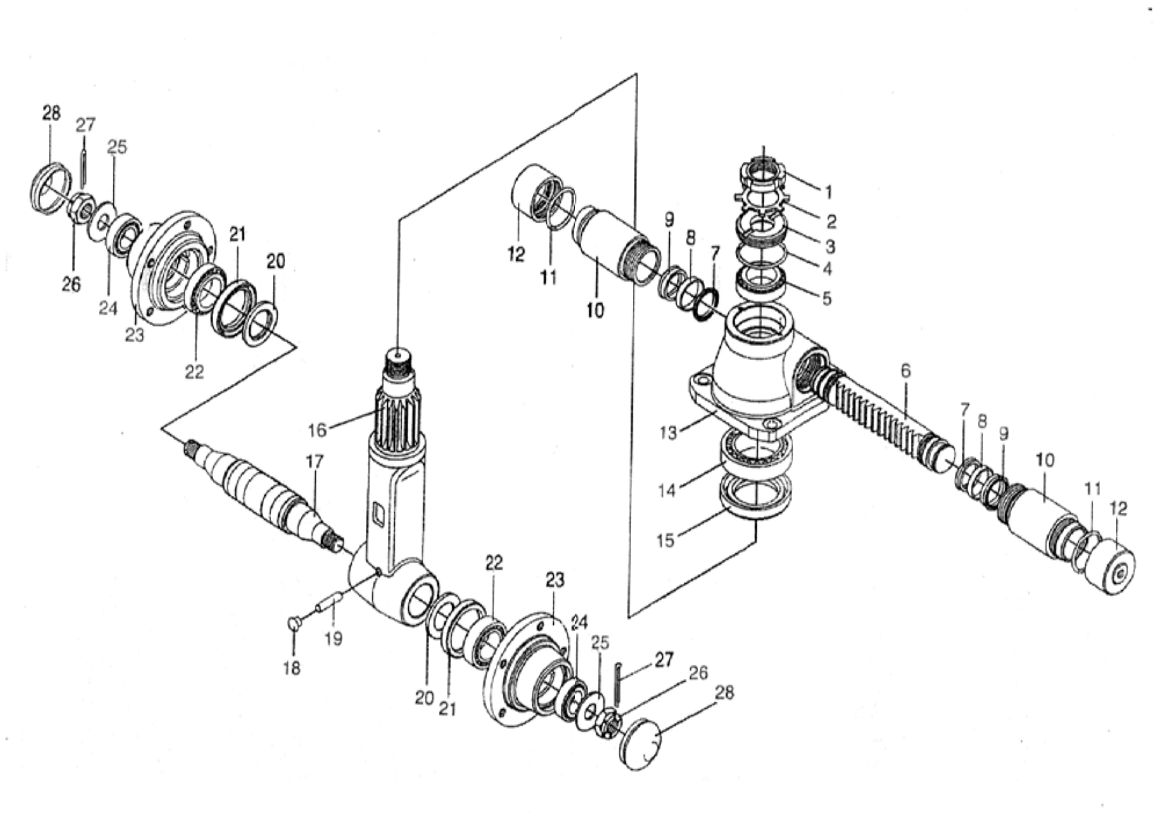

1. Hexagonal Nut	2. Gasket	3. Retainer	4. Seal Ring	5. Bearing
6. Teeth Bar	7. Seal Ring	8. Guide Sleeve	9. Seal Ring	10. Bush
11. Seal Ring	12.Cylinder Cover	13.Cylinder Body	14. Bearing	15. Seal Ring
16. Gear Shaft	17. Main Axle	18. Plug	19. Pin	20. Gasket
21. Seal Ring	22. Bearing	23. Wheel Hub	24. Bearing	25. Washer
26. Hexagonal Nut	27. Split Pin	28. Cover		

Fgure 2-9 Steering Axle

3.4 Key points of adjusting and maintenance

(1)Lubricate inner cavity of wheel hub, inside or outside bearing and cover of wheel hub, meanwhile, lubricate oil seal

(2) Fit bearing outer ring on wheel hub and fit wheel hub on main axle.

(3) Fit washer and tighten castle nut, its torque is 206-235n.m(21-24kgm)，then loose castle nut, tighten nut again, at this time, the torque is 9.8n.m(1kgm)

(4) Tap wheel hub gently by wood hammer, and rotate wheel hub for 3-4 circles to ensure there is no looseness of wheel hub.

(5) Tighten castle nut and make slot aim at split pin hole of main axle

(6)

Tap wheel hub gently by wood hammer again, rotate wheel hub for 3-4 circles by hand to ensure smooth running, then measure rotation torque,the value should between 2.94-7.8nm (0.3-0.8kgm)

(7) If rotation torque is more than standard value, you can untread 1／6 circle and then measure it again.

(8) After rotation torque is regulated to its standard value, lock castle nut by split pin

3.5 inspection After Rebuilding Of Steering System

(1) Run steering wheel right and left to its end to check if it runs uniform and stable

(2) Check the lay out of hydraulic pipeline to see if there is misplace

(3) Jack rear wheel up, move steering wheel right and left slowly; repeat for several times till exhaust air out of hydraulic pipeline and oil cylinder

3.6Malfunction Analysis(Figure 2-3)

Figure 2-3

Problem	Cause Analysis	Elimination
Steering wheel can not move	Damage or malfunction of oil pump	Replace
	Hose connector is damaged or block of pipeline	Replace or clean
Steering wheel dullness	Safety valve pressure is too low	Adjust pressure
	Air in oil circuit	Exhaust air
	Failure of steering reset.hold-down spring broken or not enough elasticity	Replace spring piece
	Too big inleakage of steering cylinder	Check piston seal
Forklift s-route move or sway	Spring broken or no elasticity	Replace
Too big noise	Oil level in tank is too low	Fuel
	Block of suction pipe or filter	Replace Or Clean
Oil leakage	Guide sleeve of steering cylinder or pipeline or connector damage	Replace

(4) Electrical System

4. Electrical system

4.1 Summary

Electrical system of FE3D is powered by 48V battery set, .traction power of the truck is powered by AC motor，lifting power is produced when AC motor is driving the oil pump to produce oil pressure. Lighting system is powered by battery 48Vto 24V voltage.

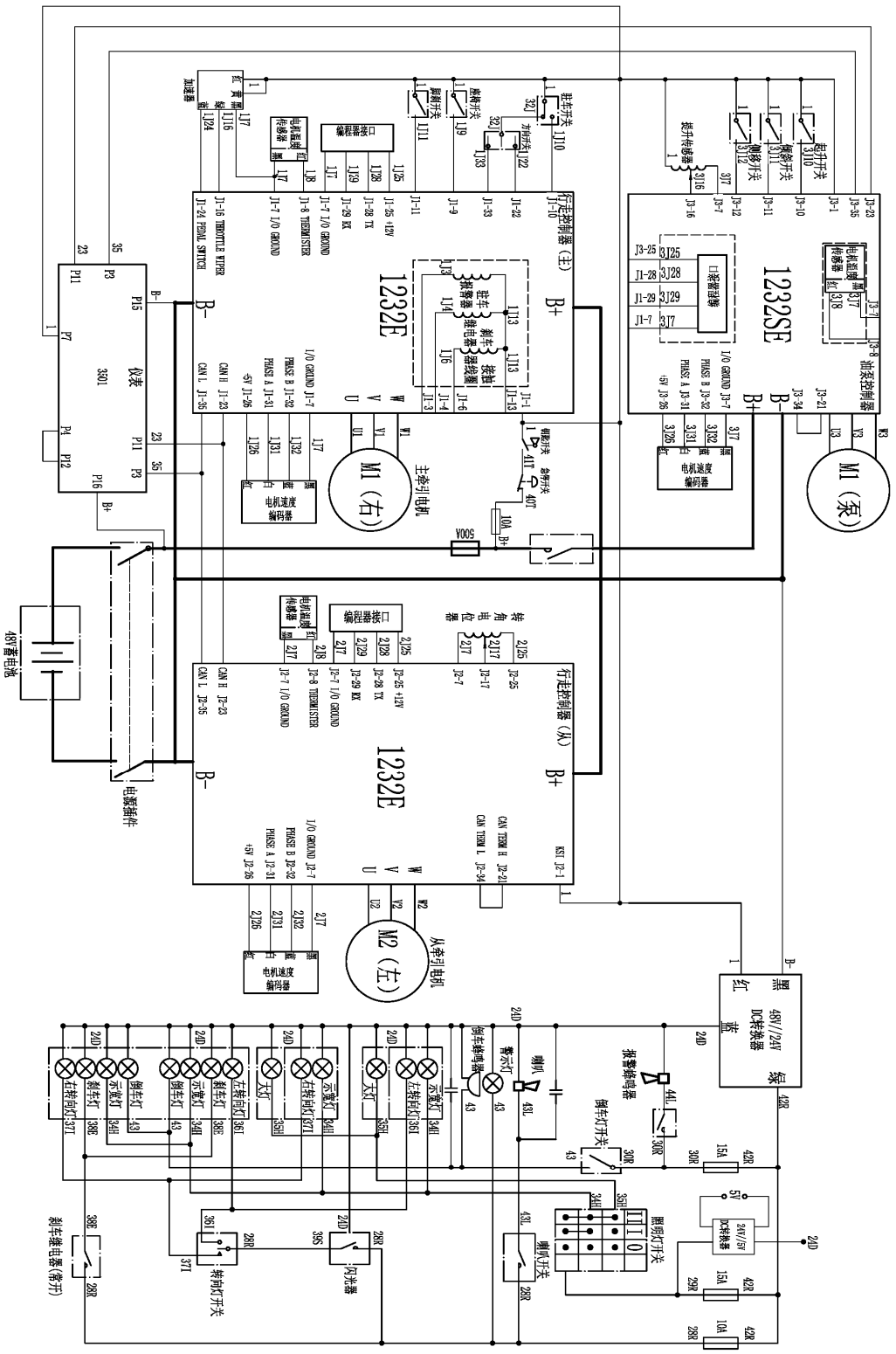

Electrical principle chate Figure（2-41)

4.2 Electrical system of direct current driving electric forklift truck (Fig.2-42)

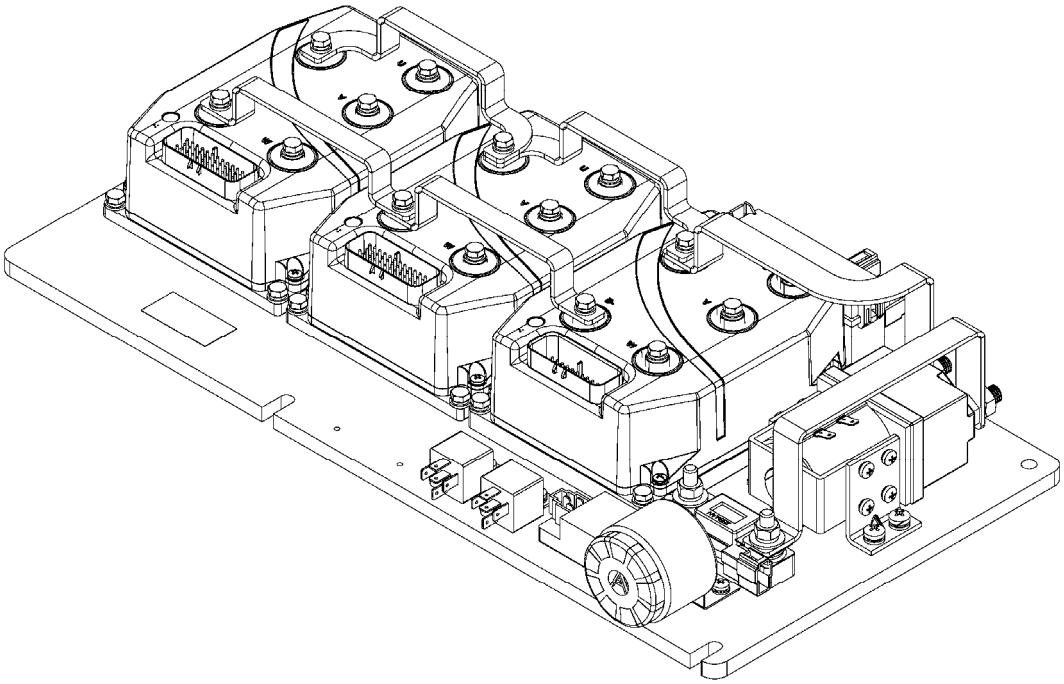

(Fig.2-42)

4.2.1 Forklift traction is AC variable-frequency motor, steering is AC variable-frequency motor controller, the dashboard display screen and AC drives adopes products from Curtis, the world's leading supplier of electric vehicle system in the United States. The adopted AC variable-frequency motor is high efficient, durable and maintenance free, basically because it has no DC motor commutator (commutator can limit the acceleration performance of truck, especially in high speed situation, it will limit braking torque), so its accelerating ability is faster. Controller is used for ecectric truck which use CANopen protocol controller for communication, through its analog and digital I/O and communications devices, it is very suitable for management of forklift movement, I/O operation, control and information display, it can discharge of battery monitoring, with all kinds of protection function. Dashboard display can show many data, undertake factory or user setting, can input multiple functions such as user commands.

4.1.2 Main functions and settings

Safe and high efficient working performance and complete operating performance of electric forklift can be achieved by setting correctly each motor technique data and control technique data and function value of controller.

1. The creeping speed of electric forklift can be set,the electric forklift work for a long time under a low speed,through creeping speed seting function of controller.

2、Acceleration can be set. Acceleration is the sense of softness or hardness of accelerating padal when operating electric forklift. By setting rate of rate,forklift can meet the need of accelerating operation under different working condition.

3、Plug braking and regenerative braking. In the course of travelling,there appears,when reversing direction rod,plug brake signal which,through the controlling of motor driver to pulling motor,presents a brake moment so as to brake the vehicle.The amount of brake power can be controlled by accelerating pedal. A proper setting of maximum brake power can ensure to brake electric forklift smoothly under different speed.Regenerative brake is,under the condition that the vehicle speed is higher than the rated value of accelerating pedal,generated by the controlling of controller. The brake power can transfer to electric power and present back to battery.Especially

when the vehicle is coasting downwards slop,in order to properly reduce the speed,regenerative brake can be achieved by properly releasing the accelerating pedal.The presenting back of electric power to battery prolongs the one-charge-travelling distance of it.

4、Function of backward slip preventation on slope,when the vehicle is stopped on slope,it will slip downward the slop acceleratedly if hand brake or food brake pedal is released. The function of backward slip preventation can prevent the phenomenon of slipping downward acceleratedly and ensure that electric forklift slips downward uniformly with a low speed.

5、The maximum travelling speed can be set.The setting of the maximum travelling speed of electric forklift can prevent pulling motor from overloading caused by excessive vehicle speed.

6、Shut down static recovery,controlling device will be shut down if seat swith or ignition key is off..Only when the direction controlling rod is switched to neutral position can the vehicle be restarted.That is to say,if the driver leaves vehicle at any time and returns back to it,it is necessary to switch the direction controlling rod to neutral position to restart. This function can prevent unexpected insecurity. There is two seconds of time delay at the input end of seat switch,which allows seat switch can be off in trashing.

7、Safety protection function.When the power element in controller is damaged in vehicle travelling,the controller will cut off main contactor as quickly as possible.When the temperature ascending speed of controller is too high,the controller will automatically limit the armature current of motor. And when the battery voltage is too low,the controller will stop working to keep safe.

8、There is self-diagnose function in pulling motor controller and oil pump motor controller.Once malfunction occurs in the working of controller,there will display malfunction code in indicating instrument,which will stop the controller from working to ensure the safety of operating system.

9、Display instrument will show battery power and the cumulative working hours.

4.2.4、Maintenance of circuit system

(1)、Check the contact wear condition; replace the contact if it’s worn and the contact should be checked every three months.

(2)、Check the pedal and tiller micro switch; Measuring the voltage drop at the ends of the micro switch, there is no resistance when the micro switch micro open closure should be without resistance, when released should have a clear voice.Check once every three months.

(3)、 Check the main circuit: battery- controller- connecting cable of the motor. To ensure that the cable insulation is good, the clamp circuit connection is fixed. Check once every three months.

(4)、Check the pedal mechanical movement to see whether the spring will deform, whether potentiometer spring can stretch out or draw back to the maximum level or setted levels.Check once every three months.

(5)、Check the contactor mechanical movement, the contactor should move freely without adhesion, mechanical movements of the contactor shall be inspected once every 3 months.

4.3 Combination instrument

Using new combination instrument, the main function is to realize auxiliary control and provide the vehicle display interface to the driver. It is composed of control circuit, the cumulative time counter (liquid crystal display), battery meter, fault code display and other circuit. Based on the current electric car demand, this instrument have new design in the control circuit and display form, which can provide drivers intuitive vehicle state information. This instrument has many advantages, such as compact structure, beautiful outline, high automatic degree and reliable quality.

Figure：

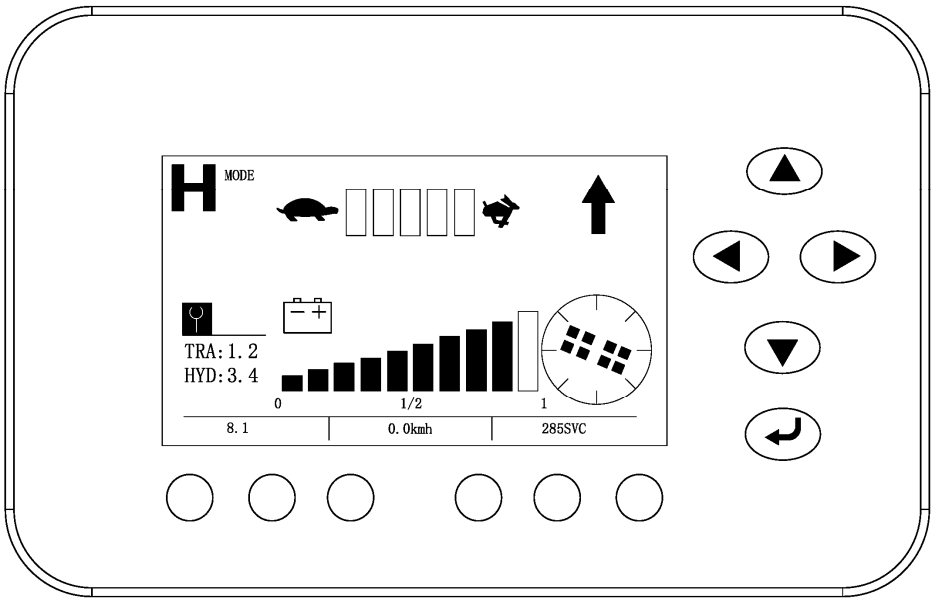

Figure 2-44 CURTIS instrument

1）、“TRVAL”means the situation of traction controller, digital code indicates controller failure, specific code please refer to 4.4 failure analysis.

2）、“HYD”means situation of pump controller, digital code indicates controller failure, specific code please refer to 4.4 failure analysis.

3）、the letter on the upper left means truck operating mode:“H”means high efficiency mode；“S”means normal mode；“E”means economic mode，press button to switch mode.

4）、Adjustment of instrument internal parameter is finished before leaving the factory, contact the after-sales department if someone wants to change it.

4.4 Failure analysis

1232SE/1234SE Controller fault table and diagnostics guide

Code display on the programmer	Code display on the instrument	Troubleshoot	Fault cause
Controller Overcurrent	1.2	controllercurrentoverload	1、motor outside U,V or Wconnection shour current 2、motor parameter mismatching 3、controller failure
Current Sensor Fault	1.3	Current sensor failure	1，motor U、V、W truck circuit，lead to current leakage 2，controller failure
Precharge Failed	1.4	Precharge failure	1，battery can't chagge
Controller Severe Undertemp	1.5	Controller temperature too low	1，The controller working environment is too harsh
Controller Severe Overtemp	1.6	Controller temperature too high	1，The controller working environment is too harsh 2，truck overloaded 3，the controller is wrongly assembled
Severe Undervoltage	1.7	Voltage too low	1， battery parameter is wrongly setted 2， non controller system power consumption 3， The battery impedance is too large 4， battery connection is disconnected 5，the fuse is disconnected, or main contactor is not connected
Severe Overvoltage	1.8	Voltage too high	1，Battery parameter is wrongly setted 2，The battery impedance is too large 3，Regenerative braking when the battery connection is disconnected
Controller Overtemp Cutback	2.2	Controller temperature too high, as a result the performance is not good	1, The controller working environment is too harsh 2，truck overloaded 3，the controller is wrongly assembled
Undervoltage Cutback	2.3	Voltage too low, as a result the performance is not good	1， battery power is insufficient 2， Battery parameter is wrongly setted 3， non controller system power consumption 4， The battery impedance is too

			large 5， battery connection is disconnected 6， the fuse is disconnected, or main contactor is not connected
Overvoltage Cutback	2.4	Voltage too high, as a result the performance is not good	1， during the process of regenerative braking, regenerative braking current lead the battery voltage to rise 2， Battery parameter is wrongly setted 3， The battery impedance is too large 4， when regenerative braking
+5V Supply Failure	2.5	Controller output 5v, poer supply failre	1， external load impedance is too low
Digital Out 6 Failure	2.6	Drive 6 output overcurrent	1， external load impedance is too low
Digital Out 7 Overcurrent	2.7	Drive 7 output overcurrent	1， external load impedance is too low
Motor Temp Hot Cutback	2.8	The motor is too hot, as a result the performance is not good	1，The motor temperature reach or above the setted program alert temperature, lead the current output to reduce 2，motor temperature parameter is wrongly setted 3， If the motor has not used the temperature sensor, programming parameters “Tempcompensation”and“Temp cutback”must be setted“OFF”。
Motor Temp Sensor Fault2.9	2.9	Motor temperature sensor failure	1， Motor temperature sensor is wrongly connecttedly 2， If the motor has not used the temperature sensor, parameter programming“MotorTemp Sensor Enable”must be setted“OFF”
Coil 1 Driver Open/Short	3.1	Drive 1 output linkng coil is open circuit or short circuit	1， connected load is open circuit or short circuit 2， connecting pin is stained 3， wrong wiring
Main Open/Short	3.1	Main contactor coil is open circuit or short circuit	1， connected load is open circuit or short circuit 2， connecting pin is stained 3， wrong wiring

Coil2 Driver Open/Short3.3	3.2	Drive 2 output linkng coil is open circuit or short circuit	1. connected load is open circuit or short circuit 2. connecting pin is stained 3. wrong wiring
EMBrake Open/Short	3.2	Electromagnetic brake coil is open circuit or short circuit	1， connected load is open circuit or short circuit 2， connecting pin is stained 3， wrong wiring
Coil3 Driver Open/Short	3.3	Drive 3 output linkng coil is open circuit or short circuit	1，connected load is open circuit or short circuit 2， connecting pin is stained 3， wrong wiring
Coil4 Driver Open/Short	3.4	Drive 4 output linkng coil is open circuit or short circuit	1，connected load is open circuit or short circuit 2， connecting pin is stained 3，wrong wiring
PD Open/Short	3.5	Proportional driving is open circuit or short circuit	1， connected load is open circuit or short circuit 2， connecting pin is stained 3， wrong wiring
Encoder Fault	3.6	Encoder failure	1，motor encoder is failure 2， wrong wiring
Motor Open	3.7	Motor is open corcuit	1， motor phase 2， wrong wiring
Main Contactor Welded	3.8	Main contactor adhesions	1， Main contactor contact welding 2， motor U or V disconnected or default phase 3，circuit that connecting B+ terminal will electricize the battery
Main Contactor Did Not Close	3.9	Main contactor is not closed	1， main contactor is not closed 2，Main contactor pin is oxydic, melted, or not stable when connected 3， external device electricize the battery 4， fuse is disconnected
Throttle Wiper High	4.1	Accelerator output is high	1，accelerator and potentiometer output voltage is too high
Throttle Wiper Low	4.2	Accelerator output is low	1，accelerator and potentiometer output voltage is too low
Pot2 Wiper High	4.3	potentiometer 2 output is too high	1，potentiometer 2 output voltage is too high
Pot2 Wiper Low	4.4	potentiometer 2 output is too low	1，potentiometer 2 output voltage is too low
Pot Low Overcurrent	4.5	potentiometer current is too low	1，potentiometer impedance is too low
EEPROM Failure	4.6	EEPROM failure	1，EEPROM storage failure

HPD/Sequencing Fault	4.7	High pedal protection /operation order failure	1，The key start, interlock, direction, and the accelerator input order is wrongly setted. 2， Wiring, switch key, interlock, direction, or accelerator input failure
Emer Rev HPD	4.7	Emergenvy reverse high pedal protection	1，Emergency reverse operation is over, but the forward, reverse input and interlock of the accelerator are not resetted
Parameter Change Fault	4.9	Parameter change failure/wrong	1，In order to ensure the safety of the truck, some specific parameter changes must come into force after the key switch is restarted
OEM Faults	5.1-6.7	OEM failure（custom failure	1，The user can define by themself the fault, use VCL code to note.
VCL Run Time Error	6.8	VCL running time is wrong	1，VCL code running time is overtime
External Supply Out of Range	6.9	External battery output is out og range	1， external loading is between 5V and 12V , battery current is too big or too small 2， in the“inspection menu (CheckingMenu)”, parameter is wrong, such as “ExtSupply Max”,“Ext Supply Min”
OS General	7.1	Operation system failure	1，internial controller failure
PDO Timeout	7.2	PDO overtime	1，CAN PDO information reception time exceeds PDOtime limition
Stall Detected	7.3	Motor stalling	1， Motor stalling 2， motor encoder failure 3， wrong connection 4， input motor encoder battery failure
Motor Characterization Fault	8.7	Motor matching failure	1， In the process of motor matching, code contrast：0=normal 1= The controller receives the encoder signal, but impulse quantity is undefined.Please manually set pulse value 2=motor temperature sensor failure 3= motor high temperature response failure 4=motor overheating response failure 5= motor low temperature sensor failure 6=low voltage response failure 7=high pressure response failure

			8= Controller cannot detect the encoder signal, channel signals disappears 9= Motor parameter settings exceed the scope
Motor Type Fault	8.9	Motor type failure	1，motor type（Motor_Type）parameters exceed the scope
VLC/OS Mismatch	9.1	VCL/OS not matched	1，VCL and OS of the controller program are not matching
EM Brake Failed to Set	9.2	Electromagnetic setting failure	1， the truck still not move after the electromagnetic brake command is setted. 2， Electromagnetic brake braking force is too small
Encoder LOS (Limited Operating Strategy)	9.3	Encoder operation is limited	1，Because motor blocked or encoder failure, the limited operating state is activated 2， wrong wiring 3， truck stall
Emer Rev Timeout	9.4	Emergency reverse response time is overtime	1， because EMR Timer expires, so the emergency switch is actiated overtime 2， emergent reverse switch has been on the “on” position all the time
Illegal Model Number	9.5	Controller type is wrong	1， controller moder can recognize 2，software and hardware type are not matching 3， controller is damaged

(5) Battery

Battery Framework See Figure

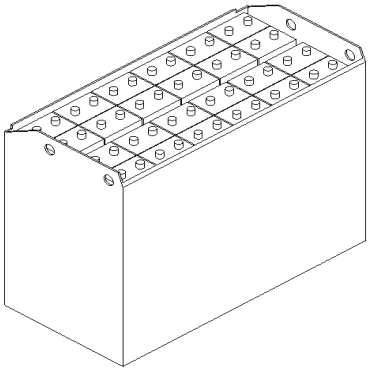

2-16

5.1 Safety Information of Battery

△ Good ventilation is necessary. Because hydrogen and oxygen will be generated at the later period of battery charging, if there is spark at that time, it may lead to explosion.

△ There is acid mist generated during charging, please exhaust it and clean battery and its workplace immediately after charging.

△

The person operate the battery should wear rubber gloves and protection goggles to prevent from skin burn or blindness caused by dilute sulphuric acid in battery .in case that acid touches clothes or skin,wash it immediately with plenty of water and ask doctor for body check and treatment. The electrolyte on cloth can be washed by clean water

△ To avoid from injury of dilute sulphuric acid, do not operate battery if you are unfamiliar with usage and risk of it

△ Do not place any metal object or tool on battery to avoid short-circuit.

△ Only after cutting off power entirely you can disconnect the connection of battery to power source.do not plug or unplug of linker with power.

△ Before installation，please read operation instruction manual carefully.Keep the manual with you after reading,to read it at anytime for convenience

5.2 usage Attention Of Battery

The lifespan of battery is between 2~3 years.if use and maintenance are proper, the lifespan can be more than 4 years.it will be damaged within several monthes under unsuitable usage.

（1）Check electrolyte level regularly, recharge and inspect battery in time. It is easy for battery maintenance but you should be patient and careful. Enough and standard density of electrolyte, keeping battery and its terminals cleanliness are necessary for longevity of battery.

（2）Check if there is standing water in battery box, once find it, and absorb it immediately.

（3）Do not keep battery with electrolyte. When storing used battery with full capacity in short time, please charge it once per month to compensate self-discharging and to prevent polar plate from sulfuration or eliminate the sulfuration.

（4）If battery can not be fully charged and fully discharged during working time, do it once per month to keep standard capacity of battery and prevent its polar plate from sulfuration

（5）Keep battery exterior clean, rub-up dust of battery by cloth, if there is electrolyte spill, rub-up or clean it with cloth or hot water, then dry it by cloth. Clean dirt and oxide of pole, rub-up terminal and lead clip. Dredge and clean venthole of oil inlet. Apply thin industrial Vaseline on pole and lead clip surface.

（6）Check battery and fixed state of lead clip. Check for battery shell if there is dehiscence or damage，check for pole and lead clip if there is burning out

（7）Check Liquid Level of Battery

Insert a glass pipe with about 6～8mm inner dia.and 150mm length into oil inlet vertically until touching top surface of pole piece, then cover top mouth of pipe by thumb and nip glass pipe out from oil inlet by index finger, middle finger and ring finger, the liquid level of the glass pipe equals the liquid level of battery which is overtop the pole slice, should be 15-25mm.finally, put electrolyte back to cell where it was.

（8）Supply Electrolyte

If liquid level is too low, you should complement distilled water, no tap water, no river water or well water to prevent impurity that can cause the failure of self-discharging; also do not complement electrolyte, otherwise the concentration of electrolyte will increase to shorten the life of battery. The liquid level can not be too high in order to prevent liquid overflow to cause short circuit. After adjusting liquid level, charge the battery for more than half an hour to mix electrolyte and distilled water equally, otherwise it may freeze inside of battery in winter.

（9）Check for Electrolyte Density

The density of electrolyte varies with the level of charging or discharging of battery. Decrease of density of electrolyte means that battery had discharged. To know the level of discharging of battery, you should measure the density of electrolyte of each cell.

A、Measuring method a: screw off each cover of cell, sip liquid up by densimeter until floater float up. To read the scale,put the densimeter in parallel with your sight-line, and let floater located in central position not to touch the pipe wall，to avoid influence of reading accuracy.

If temperature is lower than 25℃ or upper than 25℃, measure the actual temperature of electrolyte with thermometer to modify the density value of electrolyte

B、Measuring method b: there is some error of electrolyte density among different temperature,so it is necessary to modify the measured density value. When measuring，if the temperature is upper or lower than 25℃，each 1℃ higher，add 0.0007 to measured value.on the contrary，each 1℃ lower，reduce 0.0007 from measured value.If the range of temperature is too big, modify according to the following formulas:

25℃ Electrolyte Density Calculated As Following Formula:

$D25 = Dt + 0.0007(T - 25)$

D25——Electrolyte Density When The Temperature is 25℃

Dt ——Actual Measurement of Electrolyte Density

T——Electrolyte Temperature When Measuring Density

5.3 Battery Charging

（1）Initial charge（our products has been initially charged normally,users need not do this work）

The result of initial charge has a rather important influence to battery, have experience is necessary for operator to do this job.

Unused battery should be initially charged before use.

Clean battery surface and check damage before initial charge.

Open cover of oil inlet to ensure vent hole unblocked

Under the working condition of charger，infuse battery with sulphuric acid electrolyte，of which the density is 1.26±0.005(25℃) and the temperature is under 30℃，and the fluid level must be 15～25㎜ higher than guard board.

Put battery stand for 3～4 hours not exceed 8 hours. After temperature is lower than 35℃，initial charge can be made.if the electrolyte level descend after stand，it is necessary to be complemented.

Only electrolyte and distilled water which accord with en standard can be adopted to make up sulphuric acid electrolyte (do not use industrial sulphuric acid and tap water)

⚠ Slowly infuse strong sulphuric acid into distilled water and stir liquid by a glass rod or lead covered wood stick, do not infuse distilled water into sulphuric acid absolutely, otherwise, there will be liquid boiling and splashing to injure people.

To be sure the polarity of connection between charger and battery is correct, that means anode to anode and cathode to cathode, a reliable connection is necessary.

The first stage of initial charge use $0.5i_5a$ until voltage of single cell is up to 2.4v, and then begins the second stage;

The Second Stage Of Initial Charge Use $0.25i_5a$

The temperature of electrolyte should not over 45℃ during charging, halve charging current or stop charging when the temperature almost reach 45℃, wait until temperature is below 35℃,then charge again. But the charging time needs to be prolonged.

Indication of enough charging：voltage is 2.6v in second stage of initial charging meanwhile voltage change is less than 0.005v; density of electrolyte is up to 1.28±0.005(25℃), there is no evident change within 2 hours and a lot of fine and closely bubble occurs means the charge is enough. The charging capacity is 4 ～ 5 times than rated capacity and the charging time is about 70 hours.

Check electrolyte density of each cell in last stage of charging to control percentage of sulphuric acid in electrolyte. If necessary, regulate with distilled water or sulphuric acid of which the density is1.40 to manage electrolyte density and liquid level to standard value in 2 hours when charging.

When initial charge finish, clean battery surface and cover oil inlet.

（2）Normal Charge

Do not use unsaturated battery. Please pay attention to discharge when using the battery. If discharge exceeds standard value, charge it please. Excessive discharge (voltage is less than 1.7v/cell) is prohibited absulotely. Stop discharging when electrolyte density decrease to 1.17 and recharge it in time.do not lay up the battery for long time; do not stop charge randomly during charging.

In normal charge, open cover of oil inlet, check if the electrolyte level is in normal height, otherwise regulate it to the normal height with distilled water.

Connect the output of charger to battery correctly,anode to anode, cathode to cathode， absolutely no error.

Charger matched with battery can regulate charging current automatically according to battery capacity until full of charging.(consult to charger manual instructions)

It is suggested to make record of charge/discharge for each battery to know the battery condition in time. During charging, measure and write down current, total voltage, each cell voltage (with number), electrolyte density and temperature (by 0～100℃ mercury thermometer) every 1-2 hours.

When there are lot of fine and closely bubble in electrolyte and voltage of cell is stable between 2.5-2.7v, also there is no increase of electrolyte density and terminal voltage within 2-3 hours means the battery is fully charged. If one or two cell emits bubble weakly or no bubble, please find out the reason and make record

The temperature of electrolyte should not exceed 45℃during charging. If temperature close to 45℃, stop charging until the temperature is lower than 35℃.

When charging is finishede, check and regulate the density of electrolyte. If density is abnormal, spill some electrolyte, if original liquid density is too low, regulate with electrolyte of which density is1.40; if too high, regulate with distilled water. The difference of electrolyte density of each cell should less than 0.01， liquid level should be standard.charge battery for 0.5 hour with low current after adjust the density to mix electrolyte equality， then check electrolyte density again and adjust it if necessary. At last, clean the battery for use.

（3）Equalizing Charge

Under normal situation, although each cell of battery runs under the same condition， there are still some reasons can cause imbalance of the whole battery pack. In that case, equalizing charge is necessary to eliminate the difference between cells to achieve equalization for the whole battery pack. It’s easy to do the equalizing charge according to manual instruction of charger.

Normal battery need equalizing charge every 2～3 months. Equalizing charge is also necessary for battery which is out of work for long time before use.

5.4 Installation And Replacement Of Battery

Fix tightly when installing and replacing the battery to avoid overturn; do not use hammer to strike terminal and lead clip; avoid strong impact during transportation.

(6) Hydraulic System

6.1 Summary

Hydraulic system consists of working pump, multiway valve, lift cylinder, tilt cylinder and pipeline ect. See figure 2-17

Hydraulic liquid supplied by oil pump which connected directly to the oil pump.multiway valve distribute liquid to each cylinder.

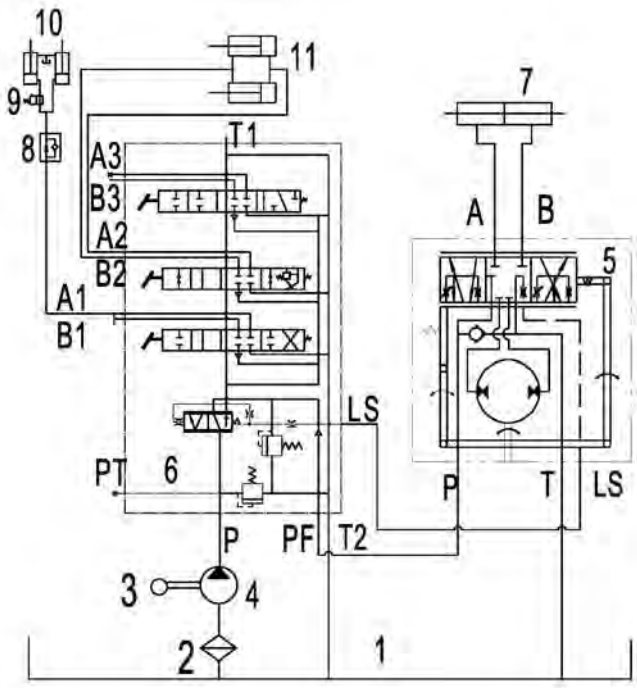

Figure 2-17 Hydraulic System Diagram

6.2 Oil Pump

Oil pump is gear pump

6.3 Multiway Valve

The multiway valve is two pieces four body structures, the high pressure oil from working pump is distributed to lifting cylinder or tilt cylinder by multiway valve rod. There are safety valve and self-locking valve inside of multiway valve. Safety valve which controls the pressure of the system, setted on the upper side of oil-inlet of multiway vavle. The main function of self-locking valve is to prevent serious consequences caused by mishandling of controlling rod when there is no pressure source for tilt cylinder，is setted on inclined valve plate. There are one way valves fitted between oil inlet and oil suction inlet of lifting valve plate also between oil inlet of lifting valve plate and oil inlet of inclined valve plate.

Multiway Valve Shell See Figure 2-18

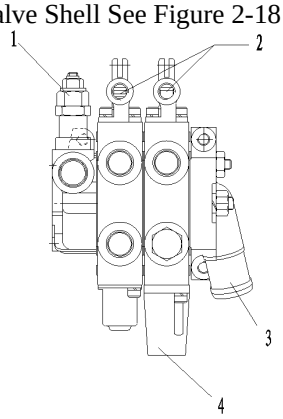

1. Safety Valve
2. Micro-Switch Support
3. Return Port
4. Lifting and Speed Regualtion Sensor Cover

2-18 Multiway Valve Shell Figure 2-18

(1) Operation of slide valve (take tilting slide valve as an example)

(A) Neutral Position(Figure 2-19)

In this case，high pressure oil discharged from oil pump go back to tank through neutral

(B) Push Slide Valve In (Figure 2-20)

Then, neutral chunnel is closed, oil from oil inlet open the one-way valve and flow to cylinder joint b, oil from cylinder joint a flow to tank through low pressure chunnel, supported by return spring, slide valve can return to neutral.

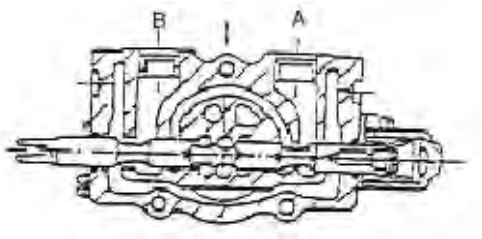

Figure 2-19

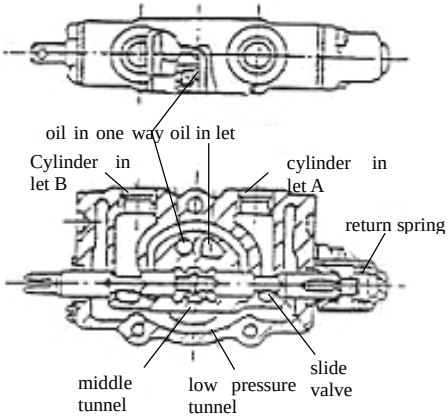

Figure 2-20

(C) Draw Slide Valve Out (Figure 2-20)

Then, neutral is closed, oil from oil inlet open the one-way valve and flow to cylinder joint a, oil from cylinder joint b flow to tank through low pressure chunnel, supported by return spring, slide valve can return to neutral.

(2) Motion of Safety Overflow Valve（Figure 2-21）

There is a overflow valve between pump hp and low pressure chunnel “LP”. Pressure liquid from lifting valve“C” play on different area of piston a and piston b, to push both one-way valve piston k and flooding lift valve piston d to locate on their valve seat respectively. Pressure liquid of hp chunnel of pump play on spring of guide valve, one-way valve e will be open. Liquid flows into low pressure “LP” through holes around valve circumference.

If open guide valve “E”, inner pressure of valve c decrease, both piston of valve e and valve c will locate on their valve seat respectively. Inner pressure decrease because liquid which flow to the back of valve d will be cut off.pressure between oil pump“HP”passageway and its inside is inbalance,under the effect of differential pressure,valve“d”opens,and the oil flow directly to low tension loop”LP”.

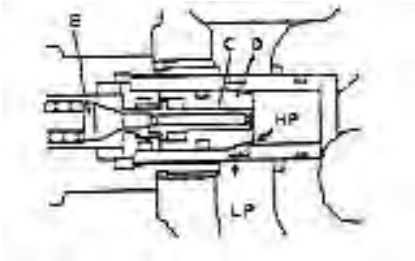

Figure 2-21

(3) Motion of Tilting Self-Locked Valve

There is tilting self-locked valve in tilt cylinder valve plate to prevent mast from fall down suddenly when cylinder cavity generate negative pressure and danger when misoperation of inclined valve stick. Because this self-locked valve, if even thrusting joy stick, mast cannot be tilted when forklift motor stop worki ng Direction of flow liquid is same as figure 2-21, here, mast is tilting backward. When valve disc is pushed in.

(A) When pump is working, push vavle disc in, liquid from main pump flow into tilt cylinder through joint b, liquid returned from cylinder play on piston through oil pore a. Liquid returns to tank through pore a or b of vavle disc. See figure 2-22.

(B) When pump is not working, push vavle disc in, there is no liquid go to cylinder joint B, so, pressure of point p cannot be up. So, piston cannot move, liquid of cylinder joint A cannot return to tank, cylinder cannot move. See figure 2-23

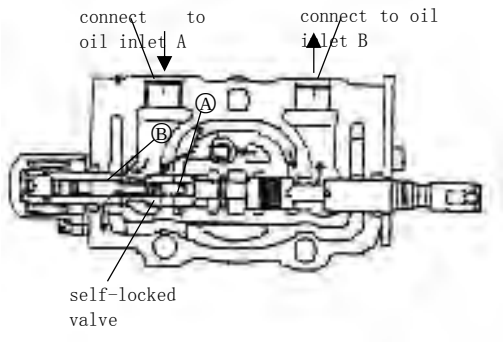

Figue 2-22

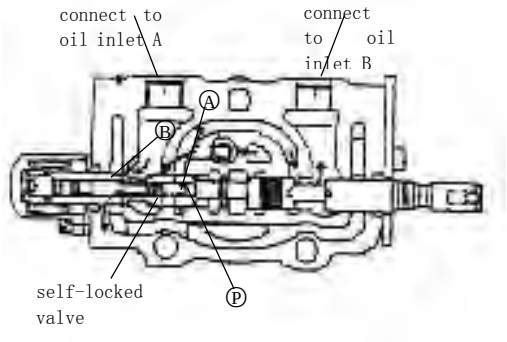

Figue 2-23

(4) Multiway Valve Operation Figure-24

Multiway valve operated by joy stick, all of joy stick installed on a connecting shaft, shaft fixed on bodywork by bracket, and joy stick controls slide valve by connecting rod.

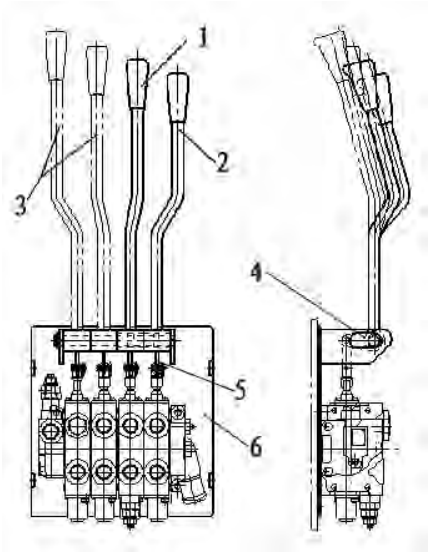

1. Tilting Operating Rod 2. Lifting Operating Rod 3. Accessary Operating Rod
4. Connecting Shaft 5. Connecting Shaft 6. bracket,

Figure 2-24 Multiway Valve Operation

(5) Adjustment of Safety Valve Pressure

Adjusted pressure for safety is 13.5/16.8mpa

⚠ **Safety pressure had been adjusted by manufacturer; user should not adjust by them.**

6.4 Lift Cylinder and Lift Chain See Figure 2-25

Lift cylinder piston is single-action piston; consist of cylinder body, piston rod, piston, cylinder head etc. Two lift cylinders located on the back of outer gantry mounting, their bottom fixed on support of lift cylinder of outer mast by pins and bolts, the top of cylinder (i.e. top of piston rod) connected with beam which is on outer gantry mounting .and there is speed-limit valve installed inside of the right lifting cylinder.

Piston is fastened on piston rod with elastic steel wire; oil seal and support ring are assembled on the outer race of pistion

There is a cut-off valve assembled on the bottom of cylinder. When lifting gantry mounting, t acts as protection in case of sudden outburst of high pressure pipe.

There are steel-backed bearing and oil seal assembled on the head of cylinder to support piston rod and to prevent from dust entering.

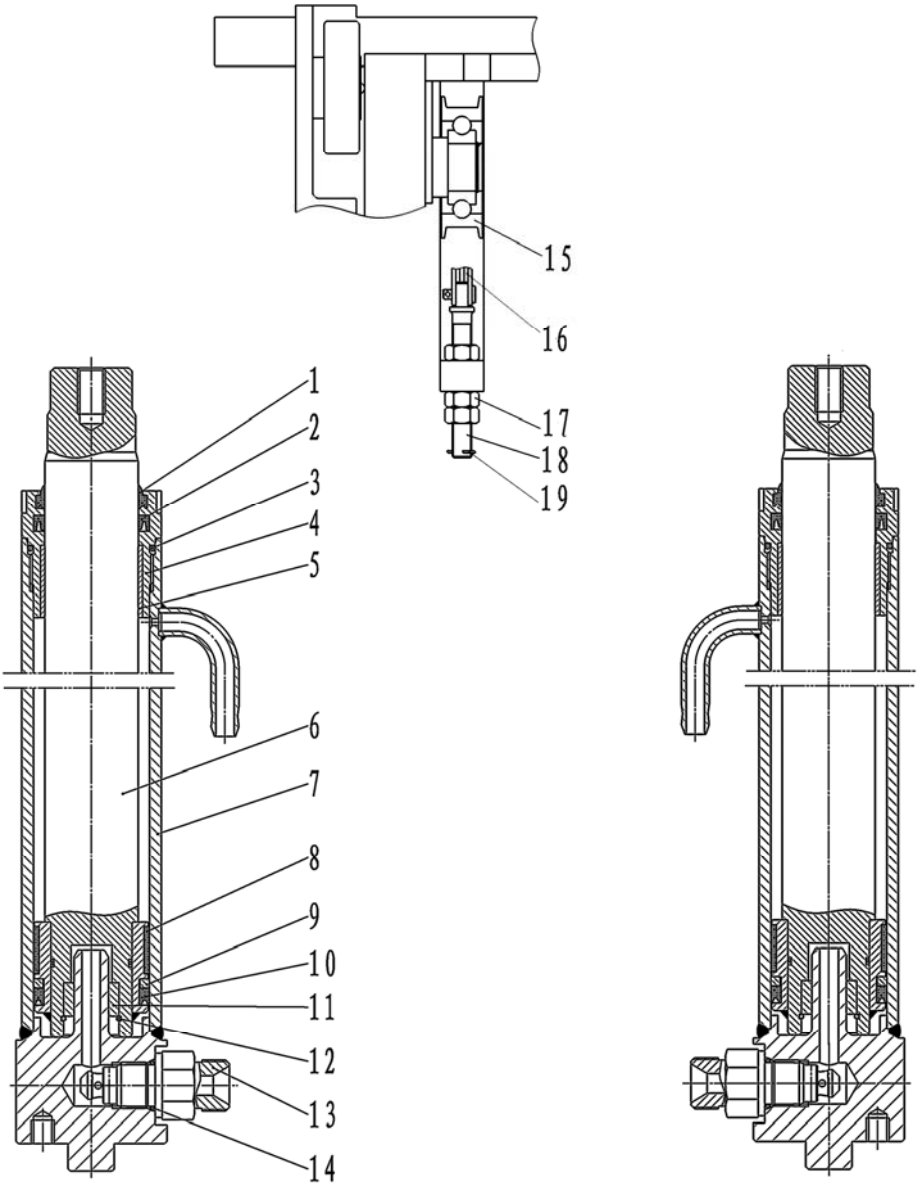

Left Lift Cylinder Right Lift Cylinder

1. Anti-Dust Ring	2. Shaft Seal	3. O-Ring	4. Guide Sleeve	5. Steel-Backed Bearing
6. Piston Rod Assembly	7. Cylinder Body	8. Support Ring For Hole	9. Retainer Ring	10. Shaft Seal
11. Valve Bush	12. Steel Cable Retainer Ring	13. Shut -Off Valve	14. O-Ring	15. Chain Wheel
16. Chain	17. Nut	18. Chain Connector	19. Split Pin	

Figure 2-25 Lift Cylinder and Chain

■Working State of Shut-Off Valve

There is a shut-off valve on the bottom of lift cylinder to prevent load from sudden drop in case of sudden outburst of high pressure pipe. (see figure 2-26) oil from lift cylinder goes through shut-off valve，holes around slide valve make pressure difference between two cavity. When the pressure

difference is less than spring force，slide valve will not work, if high pressure pipe outburst，it will occur large pressure difference which makes slide valve move and block the oil holes around， only a little oil float through small hole on the end of slide valve to make fork down slowly.

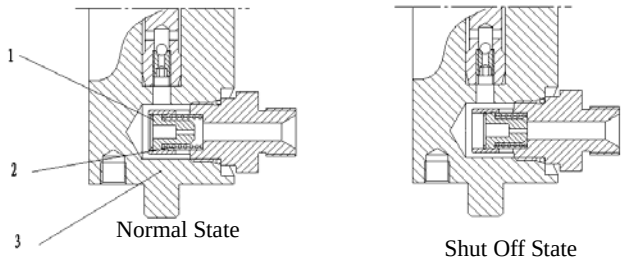

1. Lift Cylinder Body 2. Compression Spring 3. Spool

Figure 2-26 Shut-Off Valve

6.5 Speed-Limit Valve

Speed-limit valve installed in lifting pipe to control lowering speed of fork,it acts as protection in case of sudden outburst of high pressure pipe.

Connecting Method Refer to Figure 2-27

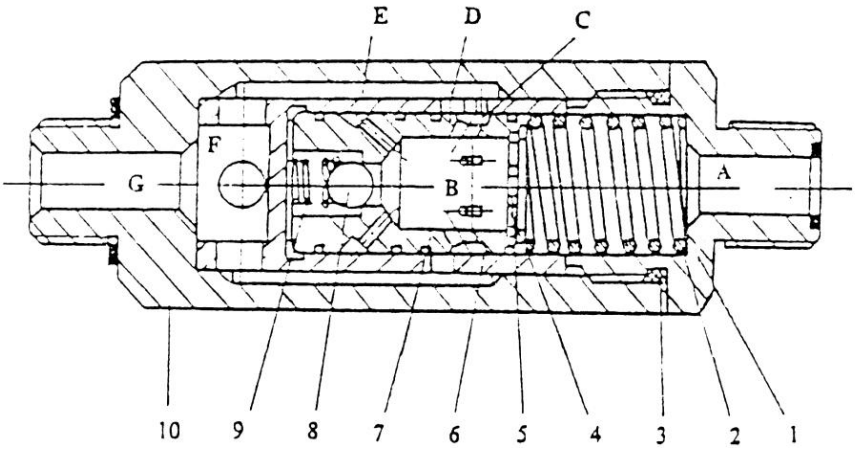

(1) Speed limiting valve joint (2) Spring (3) Sealing element (4) Circlip (5) Throttle slice (6) spool (7) Valve sleeve (8) steel ball (9) Check valve spring (10) valve body

Figure 2-27 Speed-Limit Valve

6.6 Tilt Cylinder

Tilt cylinder of which piston rod connects to gantry mounting by earloop, is double-acting structure. The bottom of tilt cylinder connected to frame by pin. There are two tilt cylinders on each side of forklift.

Tilt cylinder consist of piston, piston rod, cylinder body, cylinder bottom, guide sleeve and seal, piston and piston rod constructed by welding, there is a bearing and two **yx** seals assembled on outside end of piston, there are shaft sleeve, yx seal, retainer ring and anti-dust ring assembled inside of guide sleeve, this shaft sleeve support piston rod, seal ring, retainer ring and anti-dust ring to prevent from oil leakage and dust, it is screwed on cylinder body with o ring. See figure 2-28

When slide valve push forward，high pressure oil goes in through bottom of cylinder，so as to push pistion forward to make gantry mounting tilt forward

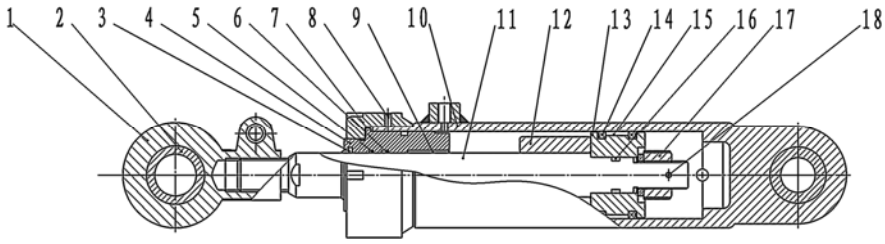

1. Swivel Joints	2. Bearing Without Oil	3. CyAnti-Dust Ring	4. Tilt Cylinder Head	5. O Ring	6. Y Seal Ring
7. Tilt Cylinder Cap	8. Set Screw	9. Guide Ring	10. Tilt Cylinder Barrel	11. Cylinder Pole	12. Adjusting Bush
13. Pistion	14. Y Seal Ring	15. Guide Sleeve	16. O Ring	17. Nut	18. Split Pin

Figure 2-28 Tilt Cylinder

6.7 Hydraulic Pipeline

Hydraulic Pipeline of Hydraulic System See Figure 2-29

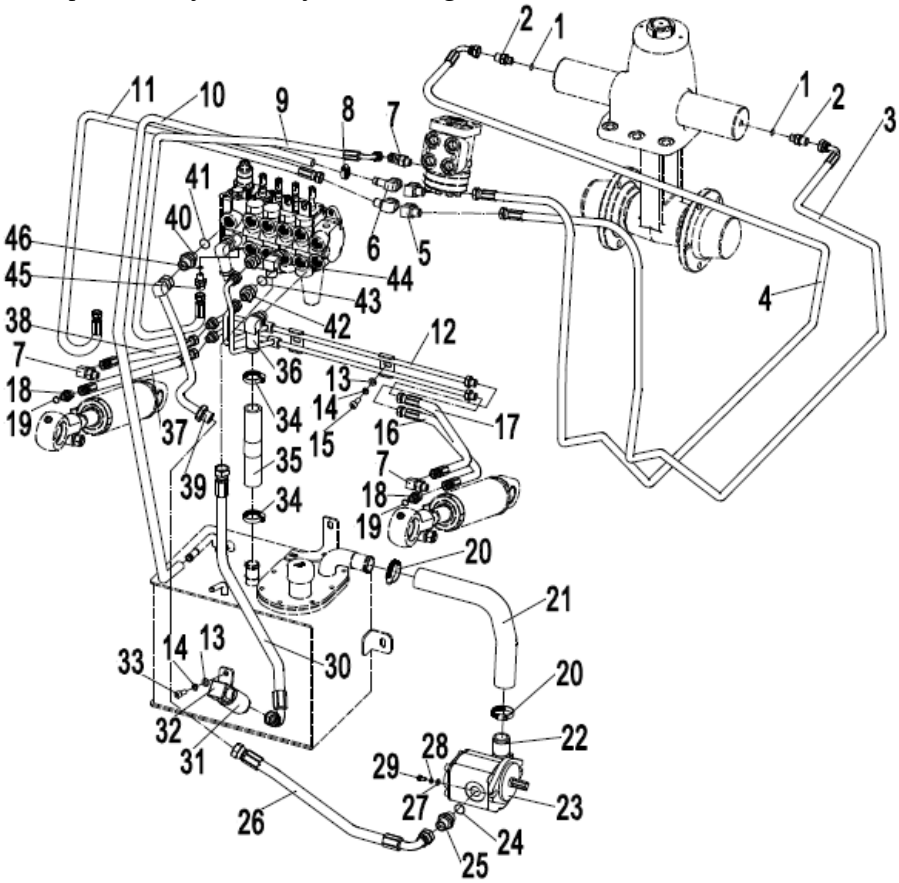

1.Washer14	2. Join	3. Hose	4. Hose
5. Join	6. Join	7.Join	8.Hoop 22-26
9. Hose	10. Hose	11. Hose	12. Steel pipe
13. Washer	14. Spring washer	15. Scerw	16. Oil pipe
17. Oil pipe	18. Join	19. O-ring	20. Hoop 40-45
21. Hose	22. Join	23. Gear pump	24. O-ring

25. Join	26. Hose	27. Washer	28. Spring washer
29. Bolt	30. Hose	31. Speed limit valve	32. Join
33. Bolt	34. Hoop 34-38	35. Oil pipe	36. Join
37. Hose	38. Hose	39. Steel pipe	40. Join
41. O-ring	42. Join	43. O-ring	44. Join
45. Join	46. O-ring		

Figure 2-29 Hydraulic Pipeline

6.8 Maintenance

Maintenance of Hydraulic Pump

(1) Disassemble

Clean completely before disassembling. Put the disassembled parts on clean paper or cloth, be carefully not to contaminate or damage the parts.

(A) Clamp pump flange on bench clamp.

(b) Dismantle connecting bolt 11, back end cover 5 and pump body 1.

(c) Dismantle scaleboard 6, driving gear 2, and driven gear 3.

(d) Dismantle seal ring 7 and retainer ring 8 from front and back end cover.

Attention:if seal ring needs not to be replaced,do not dismantle it from front end.

(2) check

Check dismantled parts and wash them with gasoline（rubber parts excluded）

(A) Check Pump Body

If contact length between pump body and gear is longer than 1/2 of perimeter, replace pump body.

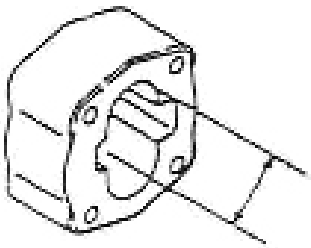

Figure 2-30

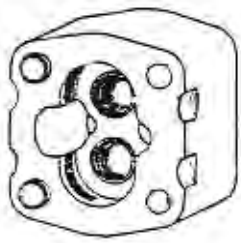

Figure 2-31

(B) Check Scaleboard

Check contact surface of scaleboard.if it is damaged or its thickness is less than rated value，replace scaleboard.rated thickness value：4.94 mm.

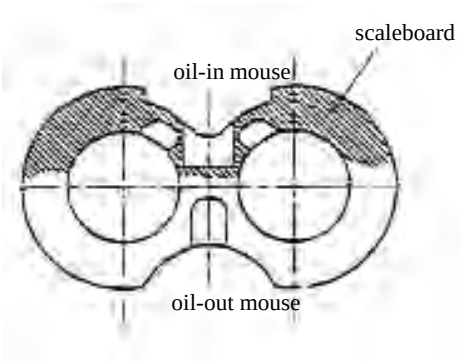

Figure 2-32

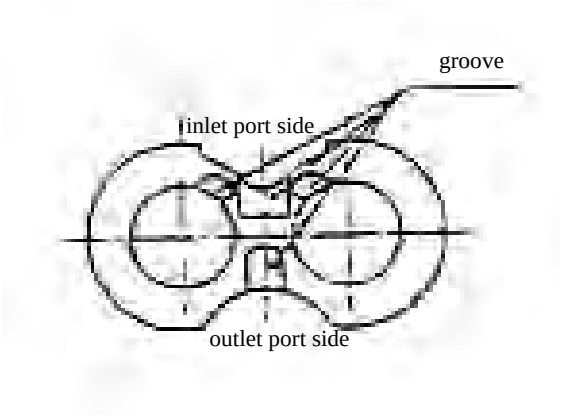

Figure 2-33

(C) Check Front and Back Pump Cover

If color changing（to brown）extent of inner surface of bush exceeds range of 150°,replace it.

(D) Check Driving and Driven Gear.

If worn badly, replace one pair, if d is less than rated value, replace two pairs.

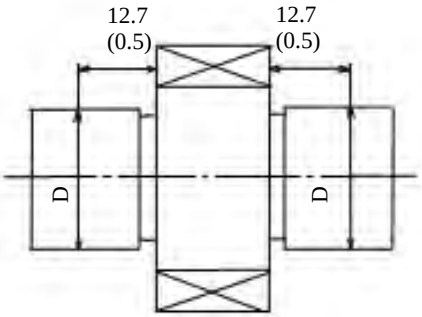

Figure 2-34

(E) If necessary,replace seal ring， bush seal component,retainer ring,oil seal,spring retainer ring.

(3) Assembling

(A) Fit a new seal ring and a new retainer ring on front end cover of pump.

(B) Fit scaleboard on front end cover groove, pay attention not to confuse oil inlet and oil outlet.

(C) Install driving and driven gears on front end cover.

(D) Install scaleboard on gear side to make groove aim at gear point, pay attention not to confuse oil inlet side and oil outlet

(E) Fit a new seal ring and a new retainer ring at back cover groove.see figure 2-33.

(F) Install back cover on pump body, pay attention not to confuse oil inlet and oil outlet

(G) Screw down connecting bolt to the rated torque 9~10kg.m after completely assembled

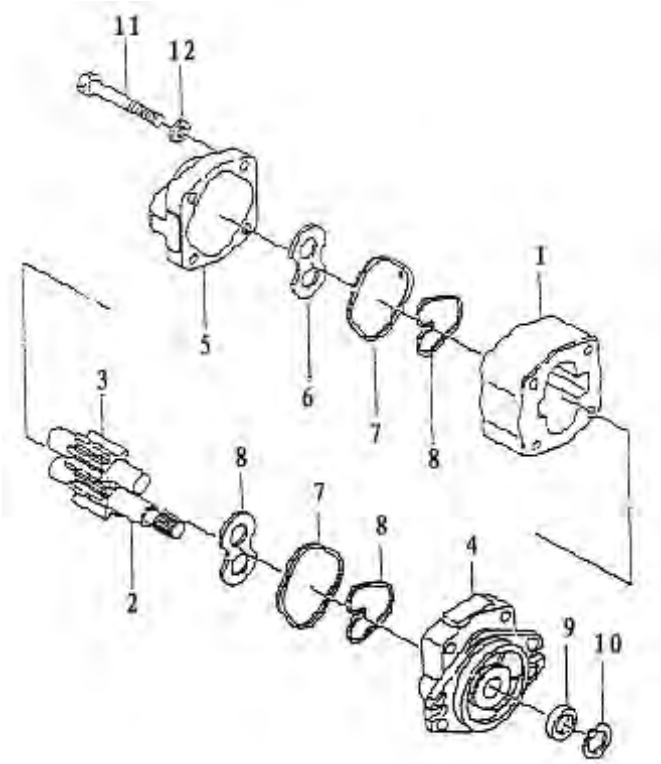

1.Pump Body	2. Driving Gear	3.Driven Gear	4.Front End Cover
5.Back End Cover	6. Scaleboard	7. Seal Ring	8.Retainer Ring
9. Oil Seal	10.Elastic Collar	11. Bolt	12. Washer

Figure 2-35 Gear Pump

(4) Trial Run

Trial run is to run-in oil pump and check if operation is normal. It is batter to test oil pump on test bed，also can do it on forklift according to next steps

If the pump is disassembled and repaired because of badly wear or blocked caused by hydraulic oil，you should replace hydraulic oil and filter before trial run

(A) Fit pump on forklift, fit pressure meter on pressure testing interface of multiway valve.

(B) Loosen adjust screw by loosen overflow valve to make pump run with 500—1000rpm for 10min. Ensure oil pressure is less than 10kg／cm^2

(C) Increase pump running speed up to 1500—2000rpm and keep running for 10min

(D) Keep pump running with speed of 1500-2000rpm，increase pressure with 20-30kg／cm^2 once for 5min until pressure get up to 175 kg／cm^2. Then run each oil circuit for 5min, after that replace oil-returning filter

When increasing oil pressure, notice the temperature of test oil, pump surface temperature and running sound. If oil temperature or pump surface temperature increase too much, reduce load to decrease oil temperature, then, test again.

(E)Keep overflow valve pressure at 175kg／cm^2 after testing,test rate of flow through lifting speed.

6.9 Malfunction Analysis

If there is failure in hydraulic system, find out reason and carry out necessary service according to following list.

（1）Multiway Valve Malfunction Analysis （Figure 2-6）

Figure 2-6

Malfunction	Cause	Repair Method
Too low of lifting oil circuit pressure	Slide valve jam	Clean after disassembling
	Oil hole jam	Clean after disassembling
Vibration Pressure ascends slowly	Slide valve jam	Clean after disassembling
	Insufficient air exhausting	Exhaust thoroughly
Steering oil circuit pressure is higher than rated value	Slide valve jam	Clean after disassembling
	Oil hole jam	Vean after disassembling
Fall short of rated oil mass	Incorrect overflow valve adjustment	Adjust
Noise	Incorrect overflow valve adjustment	Adjust
	Sliding surface worn	Replace overflow valve
Oil leakage （outside）	O- Ring is aging or damaged	O -Ring
Set pressure too low	Spring broken	Replace spring
	Valve seat surface broken	Adjust or replace overflow valve
Oil leakage（inside）	Valve seat surface broken	Repair valve seat
Set pressure too high	Valve get stuck	Clean after disassembling

（2）Oil Pump Malfunction Analysis（Figure 2-7）

Figure 2-7

Malfunction	Cause	Repair Method
Low oil extraction	Low oil level in oil tank	Infuse oil to rated quantity
	Oil pipe or oil filter jam	Clean or replace
Pump pressure too low	●Scaleboard damaged ●Supporter damaged ● Seal ring,bush seal components or retainer ring get bad	Replace
	Incorrect overflow valve adjustment	Adjust overflow valve pressure to rated value by pressure meter
	Air in system	●Tighten oil pipe of oil inlet side again ●refuel ●replace oil seal
Noise when running	oil-absorptive hose damage or oil filter jam	check pipe or repair oil filter
	Oil inlet side loosen and leak	Tighten loose point
	Too high of oil viscosity	Replace oil of which viscosity is fit to running temperature of pump
	Air bubble in oil	Find out reason for bubble and take measure
Pump oil leakage	Pump oil seal or seal ring damage	Replace
	Pump damage	Replace

7. Lifting System

7.1 Summary

Lifting system is second-class rolling contact and vertical dilation structure. It consists of inner mast, outer mast and fork carrier

7.2 Inner And Outer Mast and Fork Carrier

Inner and outer masts are weld assembly. Middle part of outer mast is assembled on bodywork by hanging scroll.

The bottom part of outer mast connected with bodywork by tilt cylinder, it can tilt forward and backward by the action of tilt cylinder.

Fork carrier moves inside of inner mast through main roller. Main roller is clamped on main roller shaft by elastic collar, main roller shaft is welded on fork carrier, side roll roll through wing plate of inner mast is assembled on composite roller, can be adjusted. In order to prevent rolling clearance, two fixed side rollers roll through outside of wing plate of inner mast. Longitudinal loading is borne by main rollers， and when lifting fork to top,upper roller will stand out from top side of mast, transverse load is borne by side rollers.

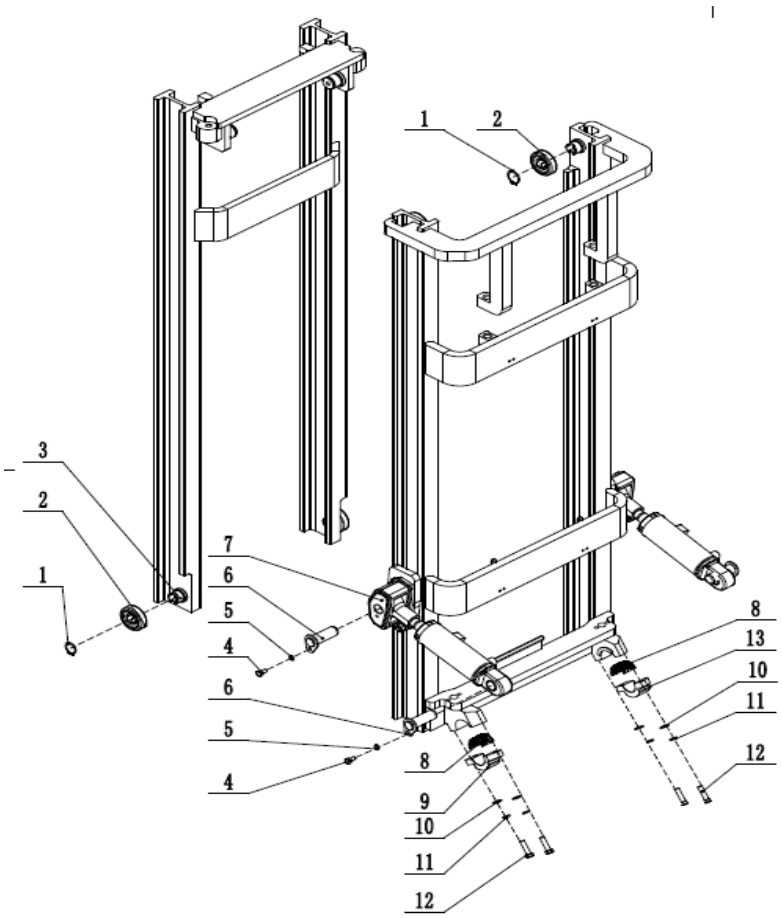

1. Circlip for shaft 2. Contact roller 3. Inner mast 4. Bolt 5. Spring washer
6. Shaft 7. Outer mast 8. Shaft sleeve 9. Shaft sleeve 10. Washer
11. Spring washer 12. Bolt 13. Shaft sleeve

Figure 2-36 (a) Inner Mast and Outer Mast

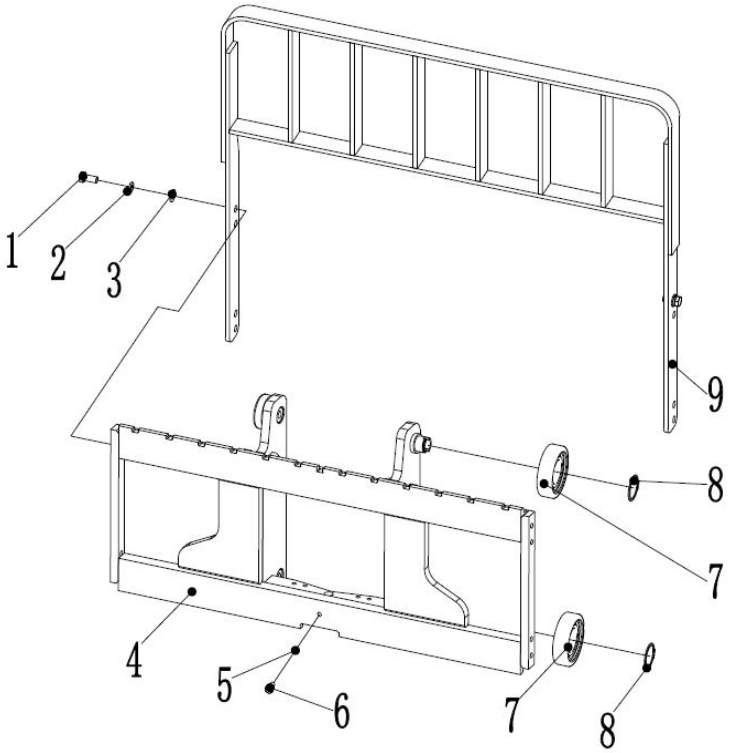

1. Bolt 2. Spring washer 3. Washer 4. Fork frame 5. Spring washer
6. Screw 7. Contact roller 8. Circlip for shaft 9. Fork bracket

Figure 2-36(b) Fork arm carrier

7.3 Roller Position(Figure 2-37)

There are two kinds of roller：outer mast composite roller and inner mast/ fork carrier composite roller, installed on outer mast， inner mast and fork carrier. Composite roller consist of main roller and side roller, main roller bears front and back load and side roller bears side load， to make inner mast and fork carrier move freely.

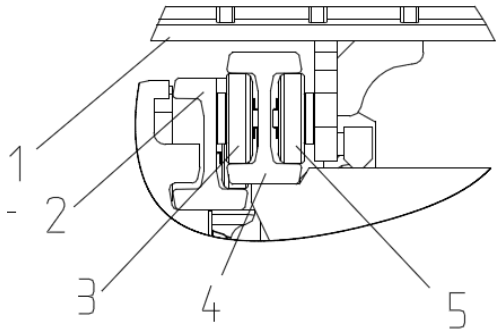

1. Fork Carrier 2. Outer Mast 3. Outer Mast Composite Roller / Fork Carrier Composite Roller 4. Inner Mast 5.Inner Mast

Figure 2-37 Roller Position

Remark:(A) Adjust Side Roller Clearance to 0.5mm

(B) Add grease on main roller surface and mast contacting surface.

7.4 Maintenance

7.4.1 Lift Cylinder Adjustment

When dismantling or replacing lift cylinder,inner mast or outer mast,travel of lift cylinder needs to be adjusted again. Do it as following

(1)Put head of piston rod into top rail of inner mast without adjusting shim.

(2) Lift mast slowly to the maximum length of cylinder to check if two cylinders act simultaneously.

(3) Add adjusting shim between head of cylinder pistion rod and top rail of inner mast

0.2mm 和 0.5mm。

Adjust tension of chain

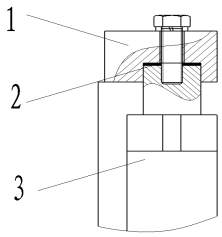

1. Inner Mast 2. Adjusting Shim of Lift Cylinder 3. Lift Cylinder

Figure 2-38 Lift Cylinder Adjustment

7.4.2 Fork Carrier Height Adjustment(Figure 2-39)

(1) Park forklift on level ground and keep mast vertical

(2）Make underside of fork touch ground.regulate adjusting nut on top end connector of chain to keep a certain distance a between main roller and underside of inner mast.(a=24～29)

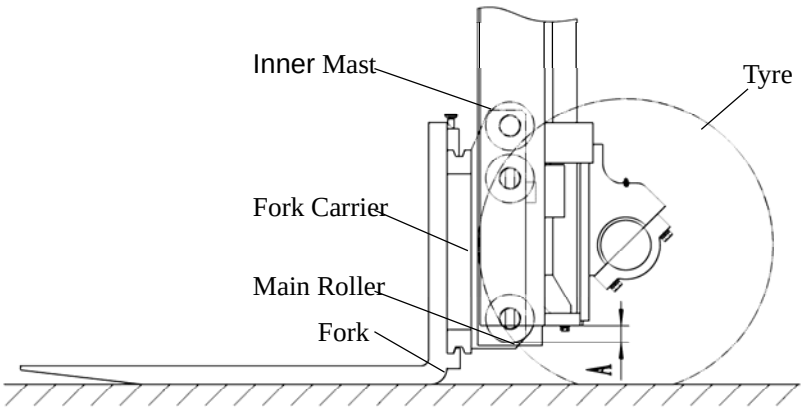

Figure 2-39

(3) Lower fork down to ground and tilt mast backward in place. Adjust upper end connector of chain，adjust nut until two chains are equal in tension.

7.4.3 Replace Fork Carrier Roller

(1) Place a salver on fork and park forklift on level ground

(2) Lower fork and salver to ground

(3) Dismantle upper end connector of chain and take off chain from chain wheel.

(4) Lift inner mast（See ① Of Figure 2-40）

(5) Make sure that fork carrier is separated from outer mast,back forklift（see ② of figure 2-40）

(6) Replace Main Roller

(A) Dismantle all spring retainer rings, take off main roller with drawing tools.notice to hold adjusting shim

(B) Make sure that new roller is the same to the one to be replaced, fit new roller on fork carrier and clamp it well with elastic collar.

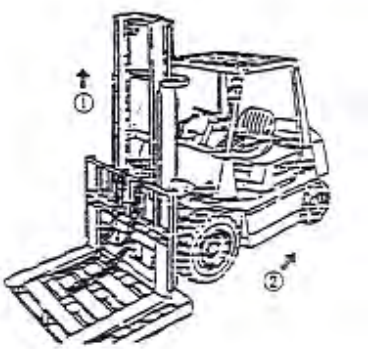

Figure 2-40

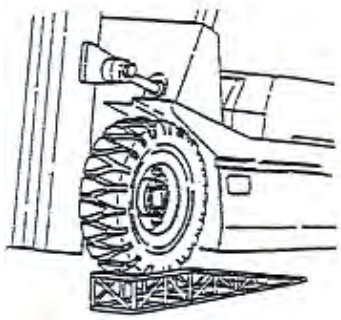

Figure 2-41

7.4.4 Replace Mast Roller, Refers to Figure 2-41

(1) With the same method as replacing fork carrier roller stated in 7.5.3，dismantle fork carrier from inner mast

(2) Drive forklift to level ground and underlay front wheels up to 250-300mm

Strain hand brake, chock up back wheel with wedge block

(4) Dismantle bolt between lift cylinder and inner mast. Hang up mast, notice not to lose the adjusting shim on head of piston rod.

(5) Dismantle connecting bolt between lift cylinder and bottom of outer mast, dismantle lift cylinder oil pipe and oil pipe between two cylinders, not to loose oil pipe connector

(6) Lay down the inner mast, dismantle the main roller on the bottom of inner mast.then,the main roller on upper side of outer mast will also show out from the top of inner mast

(7) Replace Main Roller

(A) Dismantle upper side main roller with drawing tools,not to lose adjusting shim.

(B) Fit on new roller together with adjusting shim dismantled in step（a）

(8) Sling inner mast until all rollers engaged in it.

(9) Install lift cylinder and fork carrier in reverse order of dismantling

7.5 Accessaries Assembling Instructions

⚠**If Users Need To Assemble Accessaries，Please Inform Our Sales Department，Do Not Assemble By Yourself**

8 Disassembly and Assembly

8.1 Attention

(1)Only qualified operator can repair or dismantle parts on forklift

(2) Before dismantling and inspecting, park forklift on level ground and wedge truck to prevent moving suddenly, meanwhile, turn main switch off and cut battery off.

(3)Before dismantling and inspecting, remove metal ring, watch and other metal item from you to prevent sudden short circuit.

(4)During disassembling, please use right tools, use special appointed tools when requested

(5)Choose optimum elevating equipment to hoist parts dismantled to prevent danger.

(6)Check slings for safety. Keep slings tension during lifting.

(7)Be careful to prevent falldown of heavy parts attributing to unbalance during disassembling operating.

8.2 Hoisting Location for Parts Dismantled

(1) Hoisting for Lifting System. See Figure 2-42

Model	（Mm）Profile: L×W×H（Mm）	Weight（Kg）

FE3D32-35	1543×1040×2025	510
FE3D40	1543×1040×2025	540

(2) Hoisting for Overhead Guard See Figure 2-43

Model	Profile: L×W×H（Mm）	Weight（Kg）
FE3D32-25	1484×1060×1461	84
FE3D40	1377×1060×1461	77

Lifting Hole

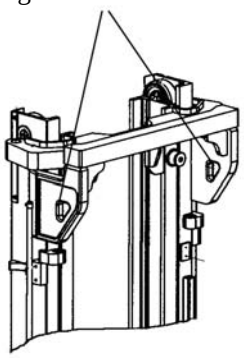

Figure 2-42

Lifting Hole

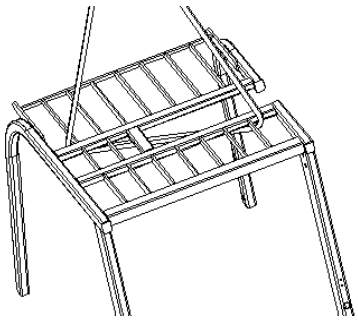

Figure 2-43

(3) Hoisting for Balance Weight See Figure 2-44

Model	Profile: L×W×H（Mm）	Weight（Kg）
FE3D32-35	376×1100×838	950
FE3D40	329×1100×838	850

(4) Hoisting for Battery Box See Figure 2-45

Model	Profile: L×W×H（Mm）	Weight（Kg）
FE3D32-35	738×830×647	1100
FE3D40	630×830×647	950

Lifting Hole

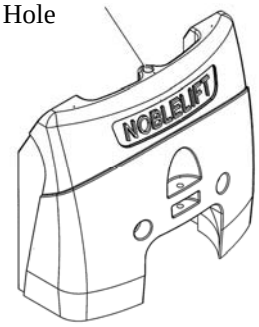

Figure 2-44

Lifting Hole

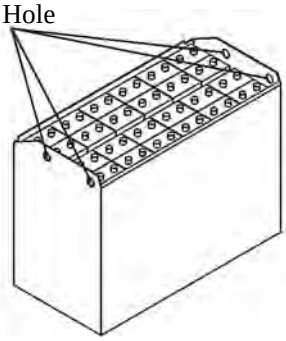

Figure 2-45

⚠**Battery Has The Function Of Counterweight，So Users Can Not Replace It At Will Otherwise It Will Affect The Balance Of Entire Vehicle And Other Performances**

Ⅲ Operation，Usage and Safety of Forklift

1. Driving And Operating

In order to keep a wonderful performance，safe usage and economically running,here introduce some notice for standard operation

①. Usage of New Vehicle

⚠**·Each Packing Thing From New Vehicle Should Be Reclaimed According To The Stipulation Of Local Government.**

It Is Necessary To Carry Out A Trial Run Before Use Of New Vehicle To Affirm That Every Part Of Forklift Can Work Normally（See In Page 75 In Detail.1.Check Before Operation）

The lifespan of your vehicle depend on usage of your new truck,in first 200h of initial running ， pay attention to the following attentions

⚠**·Whatever Season It Is，You Must Run The Truck Warm Before Operation.**

·Do Maintenance Better Than Normal

No rude operation, no unreasonable usage

②. Relationship between load and forklift stability

Within load curve, forklift takes front wheel center as pivot to keep balance of vehicle body and load, pay attention to load center and load capacity to keep vehicle stably

When Exceeding Load Curve，There Will Be Danger For Back Wheel To Be Uplifted，And If The Working Condition Is Bad，Forklift Maybe Overturn And Lead To Serious Accident. Load Close To The Prong Has The Same Result With Add The Weight Of Load. In That Case，Loading Capacity Should Be Decrease

③. Load Center and Load Curve

Load center is distance from front fork end to load gravity center. The plate stuck on vehicle describes the relationship between load center and permissible load（rated load. If it is damaged or lost, replace it with a new one.

If There Are Accessaries，Such As Side Shifter，Scraper Bucket Or Rotating Fork Installed On Vehicle. The Reson Why Rated Load Is Less Than Standard Load（With No Accessary）Refers To Following Items.

1) Have Decreased Load Equal To That Of Accessaries.

2) Length Of Accessory Leads To Front-Moving Of Load Center，Rated Load Should Be Decreased For The Same Reason.

It Is Called Losing Of Load Center That Installation Of Accessory Leads To Front-Moving Of Load Center

Do Not Exceed Rated Load In Load Curve Stuck On Vehicle Or Accessaries

④. Forklift Stability

There is forklift stability standard defined in iso or other standards; however, the stability stated in these standards is not suitable for all operation state because forklift stability is different in different operation state.

In following operation state, maximum stability can be ensured.

1) Hard smooth ground
2) Run under standard load or unloaded
Standard unloaded condition: lift fork or other bearing accessaries lie 30cm high from ground, tilt gantry mounting backward in place without load.

Standard loaded condition: lift fork or other bearing accessaries lie 30cm high from ground, carrying rated load at standard load center, tilt gantry mounting backward in place.

When Loading Or Unloading，Tilt Forward Or Backward With Minimum Extent.Unless Load Is Fastened Or Use Rigid Fork Carriage， Or Low Lifting Height， Otherwise Do Not Tilt Forward.

⑤. Transport,Loading and Unloading of Forklift

(1) Transport

⚠ **Transporting With Lorry， Lock Wheels And Fasten Forklift Entirely With Slope， So As To Stop Forklift From Moving During Transportation**
When Loading Or Unloading Or Transport On High Way,Please Watch The Overall Length,Overall Width And Overall Height, Relevant Laws And Regulations

(2) Loading and Unloading of Forklift

⚠ **·Please Use Gangplank With Enough Length， Width And Strength.**
·Practically And Efficiently Stretch Parking Brake Of Lorry To Stop Wheels.
·Gangplank Is Practically Fastened In The Center Of Carriage， No Grease Sticking On It.
·Left And Right Of Gangplank Should Be Equal In Height， So That Vehicle Can Move Smoothly When Loading Or Unloading.
·In Order To Prevent Danger， Please Don’T Steer On Gangplank Or Move Crosswise On It.
·When Loading Onto Lorry, In Order To Let Left And Right Wheels Step On Simultaneously, Please Back Lorry Slowly.

⑥. Preparation Before Driving

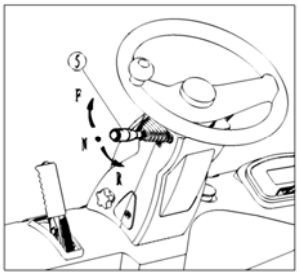

(1) Check position of direction switch handle⑤， and push it to neutral position(n).

(2) Turn On Ignition Key
Hold handle ball of steering wheel， then turn on ignition key and keep it at “on”position.

⚠ **·Even After Ignition Key Is Turned To “On”Position，1 Second Is Needed From Brake Release To Startup**

手柄球 handle ball of steering wheel

Before Turn Ignition Key To“On”Position，If The Shift Bar Arm Is At“F”Or“R”Position，Push It To “N”Position.

Do Notice That If Step Down Accelerator Pedal Suddenly, Vehicle Will Probably Accelerate Suddenly.

(3) Tilt Mast Backward

Pull lifting handle backward to lift fork up about 150-200mm above ground, then pull tilting handle backward to tilt backward the mast.

(4) Operation of direction switch handle⑤

Direction switch handle decide moving direction（forward-backward）

Forward F：Push Handle Forward.

Backward R：Pull Handle Backward.

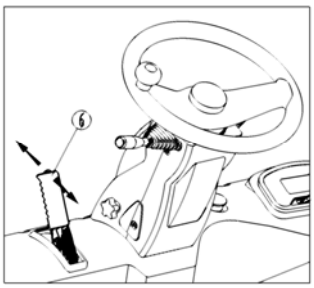

(5) Release Parking Brake Handle

Step Brake Pedal Down

Release parking brake handle forward perfectly, hold steering wheel by left hand and rest right hand on steering wheel.

⑦. Driving

(1) Start-Up

Remove foot from brake pedal and step accelerator down gradually, then forklift start to move

Acceleration vary with travel stepped down of accelerator pedal

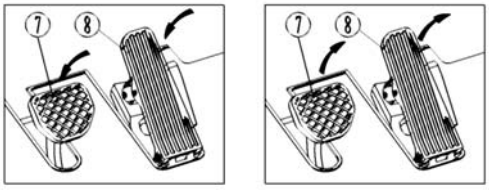

⚠**·Do Not Startup Or Brake Suddenly To Prevent Cargo From Falling Down .**

(2) **Deceleration**

Release accelerator pedal slowly. If necessary, step brake pedal down. Except emergency brake, release accelerator pedal to speed down slowly until parking. But even release accelerator pedal suddenly, emergency brake can not be achieved. When there is an emergency situation, step brake pedal down to achieve emergency brake.

⚠**·Speed Down Under The Following Situations**

A) Turning At Crossing
B) Approach To Goods Or Pallet
C) Approach To Stockpile
D) At Narrow-Aisle
E) Bad Ground Or Road Surface

·When Driving Backward，Must Look Backward To Ensure Safety. It Is Dangerous To Drive Backward Only Depend On Backview Mirror.

(3) Steering

Forklift is different to auto because forklift steers with back wheels, speed down when steering and pay attention to swing of back part of forklift.

⚠**Do Notice That When Steering，The Faster The Vehicle Moves And The Less The Steering Radius Is，The Easier It Will Overturn.**

(4) Move and lift simultaneously（inching operation）

A) Move first，let fork prong approach to goods about 3-5m

B) Step down brake pedal entirely.（standstill）

C) Step down accelerator pedal to achieve a proper working speed

D) Operate lifting handle to start lifting with fork

⚠**·Operation Of Moving And Lifting Simultaneously（Inching Operation）Is A Work Which Asks For A High Level Of Proficiency, Be Sure To Understand Goods' Characters Such As Shape,Gravity Center And So On. Lift And Lower Fork Slowly After Affirm The Stability Of Forklift, Please Be Careful During Operation.**

It Is Very Dangerous To Tilt When Fork And Load Are In A High Position. Except For In And Out Operation Of Fork, Don'T Operate The Vehicle On Load Stage.

·In Order To Reduce Danger Of Moving When Fork And Load Are In A High Position, Make Lifting Operation Only When Vehicle Is Very Close To Load Stage.

⑧. Parking and temporary parking

⚠**·Parking Safely**

·Parking Place Should Be Broad And Flat As Much As Possible.

·

When Unloaded Vehicle Has To Park On Slope，Park It With Gantry Mounting Face Downward，Block Wheels To Make It Not Moveable.

·Park Vehicle At Safe Place Or Appointed Place Outside Of Working Place

·Use Attention Label Or Signal Lamp When Necessary

·Park On Firm Ground，Notice To Prevent Skid And Caving-In.

·When Fork Can Not Be Lowered Because Of Vehicle Malfunction，Hang Cloth On Fork Prong Facing To The Side Impassable For People And Vehicle.

·Do Pay Attention To Skid Or Caving-In Of Ground

·Lower Fork When Vehicle Is In Full Stop，It Is Very Dangerous To Lower It When Moving.

·Do Not Jump Off Vehicle

·When Get Off Vehicle， Facing To Forklift And Use Footboard

·Make A Deceleration Operation，Step Down Brake Pedal To Stop Forklift，Push Shift Bar Arm To Neutral Position"N".

·Park Vehicle At A Place Where Is Convenient For Other Vehicle And Do As Following.

A)Pull back parking brake handle in place to activate parking brake.

B) Lower fork down to the ground

C) Turn ignition key to"off"position

D) Take off key and keep it carefully

E) Be very careful when get on or get off vehicle

F) Park forklift

·When Leaving Forklift，Pull Parking Brake Handle Entirely And Tilt Gantry Mounting

Forward A Little，Lower Fork To Ground. When Parking Forklift On Slope，Put Wedges Under Wheels.

·When Leaving Forklift，Take Off Key.

⑨. Usage Of Battery

(1) Battery Charging

Choose a proper charger to charge battery and operate strictly according to operation and maintenance instruction of charger.

A) Electrolyte level of battery should not be too low.

⚠**·Keep Battery Electrolyte At Rated Level，Or It Will Lead To Too Hot Of Battery Or Burning Loss Of It.**

·The Lifespan Of Battery Will Be Shorten By The Lack Of Electrolyte.

B) Infuse Distilled Water

C) No Over-Charging

D) Keep A Good Ventilation For Charging Area.

⚠**·Battery Charging Procedure Should Be Carried Out In A Well Ventilated And Dry Place To Avoid Damp**

E) Open Battery Cover

⚠**·Hydrogen Will Be Generated In Course Of Battery Charging，Open Battery Cover When Charging**

F) Check connecting terminal, cable conductor and connector

⚠**Before Charging, Check Connector And Cable To Ensure There Is No Damage**

·Don'T Charge In The Following Situation

—Connector Pole Damage

—Rust Or Wear Condition Of Connecting Terminal Or Cable Conductor.

All these situations stated will probably lead to spark to burn and to explode.

G) Charge after turn off ignition key.

H) Check specific gravity

Before charging，it is necessary to test electrolyte specific gravity of each battery cell to find out abnormal situation .To know the electrolyte specific gravity of battery before charge can avoid accident happening.

I) Hold connector or handle instead of cable conductor when inserting or pulling out power connector.

⚠**·Don'T Pull Out Cable Conductor.**

When Cable Conductor Or Power Connector Is Broken，Get Contact With Our Sales Department To Replace The Damaged Cable Conductor And Power Connector.

J) Break charging procedure.

⚠**·Break Charging Procedure Strictly According To The Operation And Maintenance Instruction Of Charger**

·Don’T Pull Out Plug Of Charger When Charging，Otherwise Electric Spark Will Be Generated And Lead To Danger.

(2) Replace Battery

When forklift has been used continuously for a working period and the battery has been entirely consumed，replace the battery with another fully charged one and charge the battery been replaced.

⚠**·When Replacing Battery，Make Sure That Battery Matches Forklift.If Not，Working Time Will Be Shorten Or Forklift Will Overturn When Moving.**

·Replacement Of Battery Should Be Made On Platform

Replace battery according to following steps.

⚠**·Take Favor Of Proper Hoisting Tools（Accessaries）To Replace Battery When Using Another Forklift As Hoisting Device.**

·Hoisting Battery Should Be Carried Out By Professional.

A) Pull out battery plug

B) Open battery upper cover

Use gas spring or other methods to ensure block upper cover of battery to avoid cover fall down to injure human or bodywork.

C) When hoisting battery out of forklift, pay attention not to crash steering wheel or other parts.

D) After installing a pack of battery which is fully charged, connect battery plug tightly.

E) Cover battery upper cover

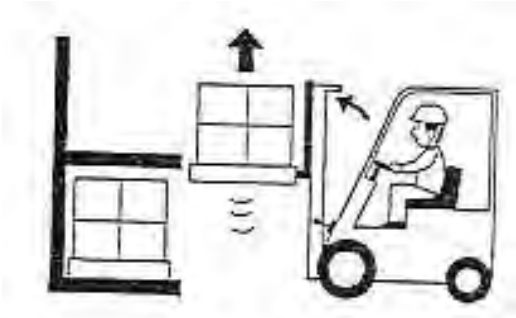

⚠**Notice Not To Squeeze Finger When Cover Battery Upper Cover.**

·Notice Not To Crash Bodywork By Swing Of Battery Box When Hoisting Battery.

⑩. Stacking

⚠**·Before Use Forklift，Check Following Items.**

A) Ensure That There Is No Goods Falling Or Damaged Goods In Loading Area

B) Ensure There Is No Goods Or Stockpile Adverse To Safety

When stacking, do the following procedure.

(1) Speed down when approach to stacking area.

(2) Park in front of stacking area

(3) Check safety around stacking area

(4) Adjust forklift position to ensure that forklift lies in front of stacking area.

(5)Adjust mast vertical to ground and lift fork until it exceed the height of stockpile.

(6) Check stacking direction and move forward, park vehicle at a proper position.

(5) Ensure goods is in upper side of stacking position, lower fork slowly and place goods correctly and safely

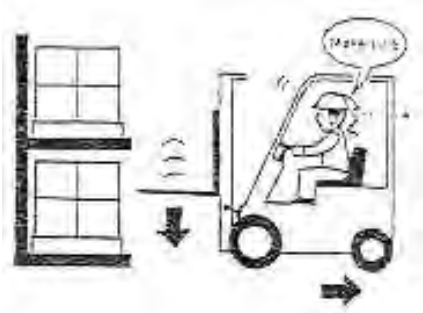

·When Goods Is Not Put Entirely On Shelf Or Bracket

A) Lower Fork Until It Doesn'T Carry Any Weight.

B) Back Forklift For Distance Of 1/4 Length Of Fork

C) Lift Fork 50-100mm Up，Move Forward And Put Goods On Proper Stacking Position

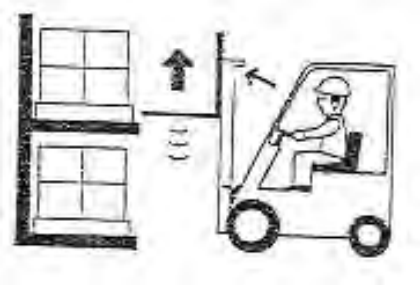

(8) Check back space, back forklift to prevent fork from crash bracket or goods

(9) Ensure fork prong left the goods or bracket，lower fork so as to drive（150-200mm above ground）

⑪. unstacking

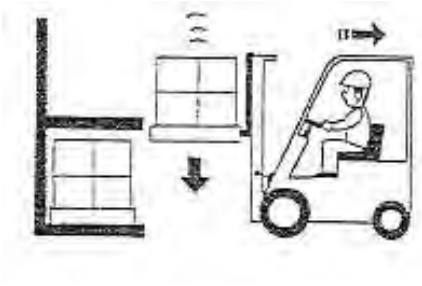

When unstacking, do the following procedures.

(1) Speed down when approach to the goods to be conveyed

(2) Park in front of goods（30cm distance from fork prong to goods）

(3) Adjust position in front of goods

(4) Make sure there is no overloading

(5) Adjust mast vertical to ground

(6)Observe the fork position when moving forward until the fork insert into the pallet completely

·When It Is Difficult To Insert Fork Completely Into Bracket

A)Insert 3/4 Of Fork Into Bracket And Lift Bracket A Little（50-100mm），Pull Out Bracket For About 100-200mm，Then Lower Bracket.

B) Insert Fork Completely Into Bracket

(7) After fork insert into bracket,lift bracket（50-100mm）

(8) Look around and back forklift until goods has been lowered down.

(9) Lower goods until 150-200mm above ground

(10) Tilt mast backward to ensure stability of goods

(11) Transport goods to destination

⑫. Storage

(1) Before Storage

Before storage of forklift, clean up thoroughly and check according to following procedures

A) Based on necessity，clean up oil and grease stuck on vehicle body with cloth and water.

B) When cleaning vehicle body, check vehicle entirely, especially if there is sinking or damage on vehicle body, if tyre is worn out, if there is nail or stone embeded in tyre surface groove.

C) Check oil leakage

D) Infuse lubricating grease if necessary

E) Check if there is looseness on interface between wheel nut and piston rod, check if there is bumping or scratch on piston rod surface

F) Check rotational stability of gantry mounting roller

G) Lift lifting cylinder to the top to filled cylinder with oil.

·Once Forklift Needs To Be Repaired, Broken Or Has Unsafe Factor，Report To The Related Person And Stop Using The Forklift Till It'S Repaired.

(2) Daily Storage

A) Park forklift at appointed area, block wheel with wedge.

B) Push gear shift bar to neutral position, pull parking brake handle.

C) Take off key and keep it in safe area

(3) Long-Term Storage

Check and maintain as following based on daily deposit

A) Considering rainy reason, park vehicle on upper and hard ground.

B) Dismantle battery form forklift.battery should be put in dry and shady area and charged once per month if forklift is parked in hygrothermal environment even indoor

C) Brush anti-rust oil on exposed parts such as cylincer piston rod and shaft which is possible to rust

D) Cover parts liable to be damped

E) Run vehicle at least once per month. Put on battery，get rid of grease on piston rod and shaft,activate motor and warm it up enough，move forward and backward slowly,run hydraulic control for several times.

F) Do not park vehicle on soft ground such as asphalt road in summer

(4) Operation after long-term deposite

A) Take away damp-proof cover

B) Remove anti-dust oil on exposed parts

C) Clean away the water and frontign matter in hydraulic oil tank

D) Put charged battery on forklift, connect battery to the power.

E) Check carefully before start-up

2. Usage of operating devices

①. Components,schematic diagram of operating devices

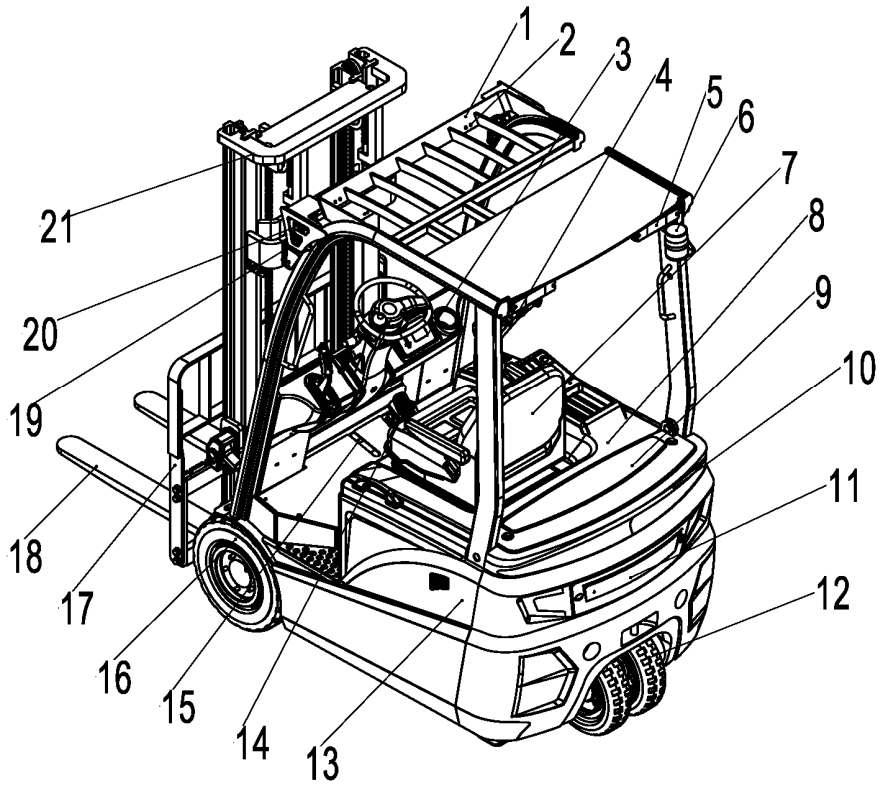

1. Overhead guard	2. Rearview mirror	3. Display	4. Operating lever	5. Rear combined lamps
6. Warning light	7.Seat	8. Cover	9. Cover	10. Balance weight
11. Back cove	12. Back wheel	13.Side plate	14. Accelerator	15.Brake pedal
16. Front wheel	17. Fork bracket	18.Fork	19.Steering device	20. Headlamp
21.Mast				

②. Combination Meter

See 4.1.3 Combination Meter (Page 19) and 4.2.3 Combination Meter (Page 24)

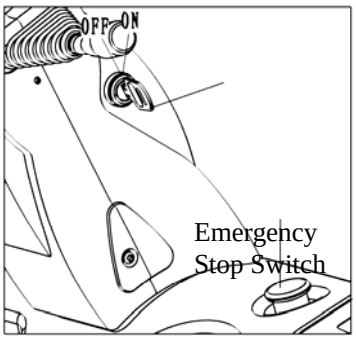

③. Switch

(1) Emergency Stop Switch

When emergency, press red mushroom-head button down to stop function of moving, steering and lifting by cut off the power. To resume the function，rotate the botton according to the arrowhead indication

(2) Ignition Key

Ignition key can connect or cut off controlling power

Off:in this position,power is cut off and key can be inserted and pulled out

On: rotate forward from” off” position, switch is turned on, forklift start-up.

⚠ **·Don’T Step Down Accelerator Pedal When Turn On Ignition Key。**

·When Leaving Forklift，Take Away Key To Prevent Other From Mishandling.

·When Parking Forklift Or Charging On Forklift，Take Away Key To Prevent Other From Mishandling.

(3) Combination Switch

Combination switch is combined by direction switch，turn signal switch and switch combination of small/big lamp

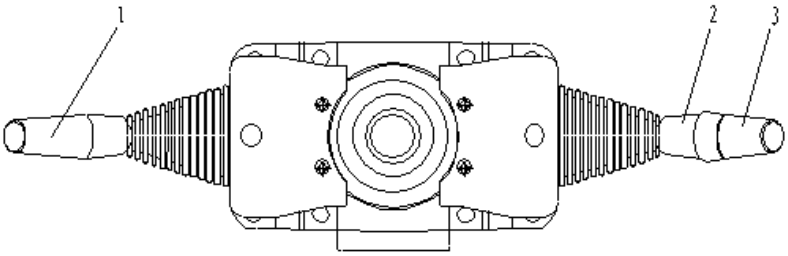

1- Direction Switch 2-Turn Signal Switch 3- Switch Combination Of Small/Big Lamp

Direction switch controls moving direction and delivers signal to instrument for display. Push handle forward，vehicle move forward，and pull handle backward，vehicle move backward. Middle position is neutral. When handle is on backward，back-up light and caution light light on，back buzzer begin to sound

Turn signal switch shows steering direction of forklift，when handle turned to steering position，steering lamp begin to blink.

Push Forward	Left Steering Lamp Blink
Middle	Neutral
Pull Backward	Right Steering Lamp Blink

Switch combination of small/big lamp controls “on” & “off” of big/small lamp,switch has two gears,rotate to first gear,small lamp light on,rotate to second gear,both small and big lamp light on

Gear / Lamp	Off	First Gear	Second Gear
Width Light	×	○	○
Taillight	×	○	○
Head Lamp	×	×	○

○:Light On ×:Light Off

(4) Back Headlight Switch

Back headlight switch is a single gear which controls on&off of back headlight, pull switch up, light on; push down, light off.

④. Controlling

(1)①And Steering Wheel Handle Ball②Steering Wheel

Steering wheel operation is traditional: steering wheel turn right, vehicle move right; steering wheel turn left, vehicle move left.there is steering wheel assembled at backside of forklift to achieve swing toward

outside when steering

When steering, hold steering wheel handle ball by left hand, put right hand on steering wheel or control handle of multiway valve. Both hydraulic steering system and steering wheel tilting gearing are standard equipment of forklift.

·Adjust Steering Wheel To Optimal Angle According To Driver'S Position.

·After Adjusting Tilt Angle Of Steering Wheel，Lock Steering Pipe By Star Handle③

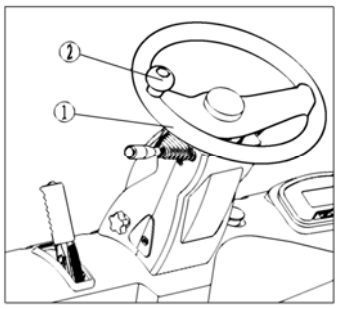

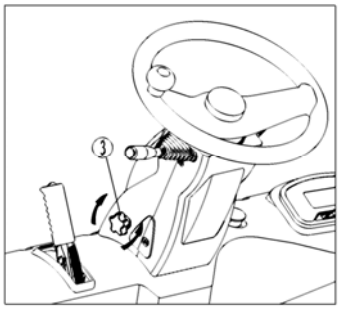

(2)④Horn Button④

Press down rubber cover located in the center of steering wheel to make buzzing sound. Even when ignition key is turned off，the horn can still sound.

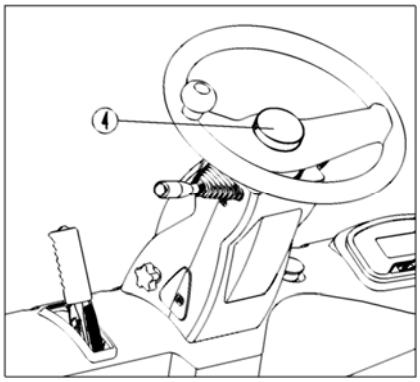

(3)⑤Direction Switch Handle⑤

Indicate Moving Direction

Push forward handle and step down accelerator pedal

Pull backward handle and step down accelerator pedal

When parking forklift, direction switch handle should be put to neutral position (n).

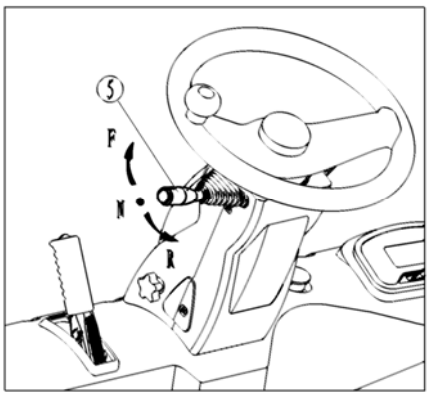

(4) Parking Brake Handle⑥

In order to prevent forklift from moving，when parking forklift，pull up parking brake handle entirely. It is necessary to push parking brake handle to end before driving.

⚠ **·When Operating Parking Brake Handle，Step Down Brake Pedal.**

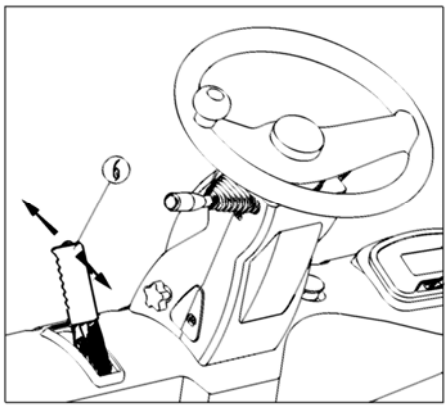

(5) Brake Pedal⑦And Accelerator Pedal⑧

⚠ **·Do Not Step Down Accelerator Pedal Suddenly To Prevent Forklift From Start Up Or Accelerating Suddenly.**

·Before Step Down Brake Pedal，Ensure Your Foot Has Been Moved Away From Accelerator Pedal.

From left to right,there are brake pedal ⑦And Accelerator Pedal⑧ In Turn.

Step down accelerator pedal slowly，forklift speed is decided by stepped angle of accelerator pedal.

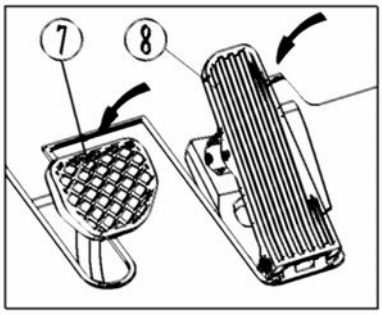

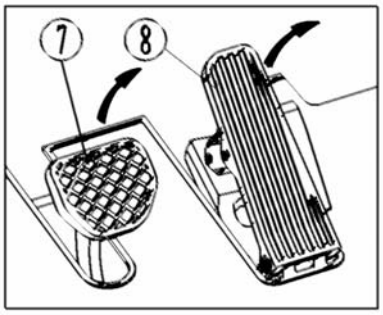

(6) Lifting Handle⑨

Pull backward lifting handle，fork lift，and push forward lifting handle，fork lower.lifting and lowering speed depend on tilting angle of handle， the larger the angle is,the faster the speed is

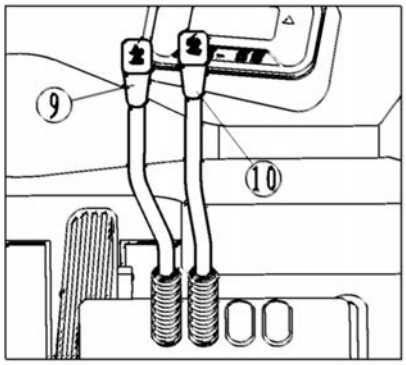

⚠**·Lifting Motion Can Not Be Achieved If Push/Pull Lifting Handle And Turn On Ignition Key Simultaneously**

·Don'T Lower Fork Suddenly Or Stop Suddenly When Lowering Fork.

(7)⑩Tilting Handle⑩

Pull backward tilting handle, mast tilt backward, push forward tilting handle, mast tilt forward. Tilting speed is decided by tilting angle of handle, the larger the angle is, and the faster the speed is

⚠**·Tilting Motion Can Not Be Achieved If Push/Pull Tilting Handle And Turn On Ignition Key Simultaneously**

⑤. Bodywork

(1) Seat

Adjust the seat till its fit to the operator by adjusting the handle

Lock will be released after pull the handle up. Move seat to and fro gently after adjusting,ensure the seat is practical locked

Adjusting range of seat： adjustable range of front and back is 120mm，the vertical acceleration plays on driver from seat on dry cement ground is 2.130m/s2-2.237m/s， integrative acceleration is 2.252m/s-2.356m/s.

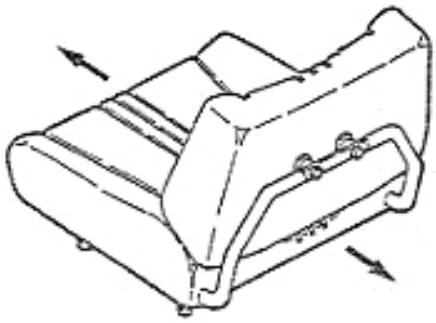

(2) Overhead Guard

⚠**·Overhead Guard Is An Important Part To Prevent Upper Object From Falling And To Protect Operator. One Of Roof Hatch Dimensions Of Overhead Guard Is Larger Than 150mm，So If Goods Dimension Is Smaller Than 150×150mm，Measures Should Be Taken To Prevent Goods From Falling And Leading To Accident. Installation Looseness，Operation Without Overhead Guard And Use Overhead Guard After Modification Are All Dangerous And Will Probably Lead To Serious Accident.**

(3) Backrest

⚠**·Backrest Is An Important Safety Part To Prevent Goods Loaded On Fork From Skidding Toward To Operator. Installation Looseness，Operation Without Overhead Guard And Use**

Overhead Guard After Modification Are All Dangerous And Will Probably Lead To Serious Accident.

(4) Towing Pin

Towing pin can only be used in following situation

·Used for escape from trouble when can not move（such as tyre stuck in groove）

·Used for conveyance of forklift when loading on or unloading from lorry

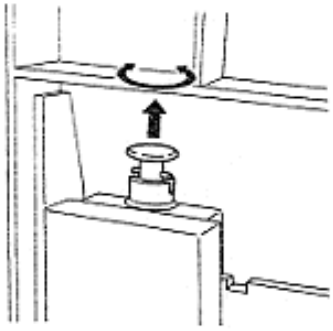

⚠**·Do Not Use It For Towage Or In Tow Operation Absolutely**

(5) Fork Locating Pin

Fork is locked by fork locating pin to a particular position. When adjusting space between fork，pull up fork locating pin，turn 1/4 circle，and adjust fork to specified position. Adjust space between forks according to goods to be loaded.

⚠**·According To The Principle Of Load Gravity Center Shou** Armrest **ehicle Center，Left And Right Should Be Adjusted To Be Equal In Distance, Fasten Fork By Fork Locating Pin To Stop From Moving After Adjusting.**

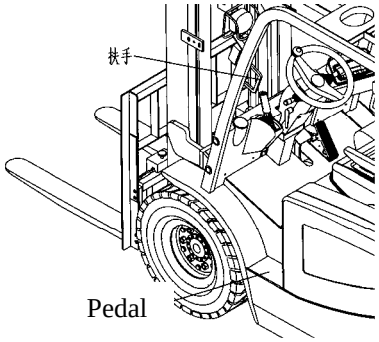

·When Adjust Space Between Fork，Lean Against Body On Loadguard And Stand Firmly，Push Fork With Your Foot. Don'T Adjust By Hands Absolutely.

(6) Pedal and Armrest

Pedal lies on left side of vehicle body, armrest locates on left front brace of overhead guard. Use pedal and armrest when get on or off vehicle to keep safe.

(7) light

Grouped lamps(big) installed in front of vehicle（including illuminating lamp ,steering signal light，parking light，width light）.rear grouped lamps installed in backside of vehicle which includs tail light，steering signal light，brake light，parking light，back-up light and flasher.

⚠**·Identify The Working State Of Lights，If Lamp Burning Out，Lampshade Damaged Or Become Dirty, Repair Or Replace Them Immediately.**

(8) Rearview Mirror

Rearview mirror installed on right of front beam of overhead guard.

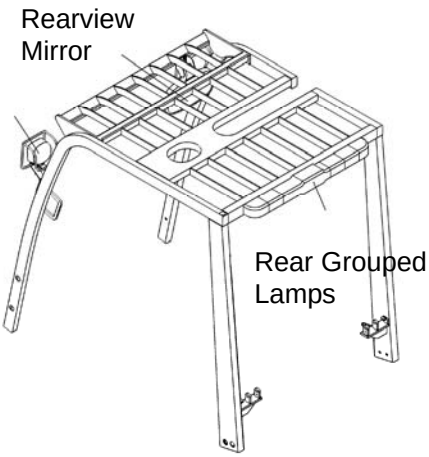

⚠**·Keep Cleanliness Of Rearview Mirror Surface**

·Regulate Rearview Mirror To A Proper Position Where The Driver Can Have A Good Sight Of Backside

(9) Battery Plug

Battery plug is used for connect or cut off power，in normal situation，it should always be connected.

⚠ **·If Its Necessary To Touch Inner Electric Parts By Hand，It Is A Must To Pull Out Battery Plug To Prevent Danger.**

·Even When Ignition Key Is In“Off”Position，There Is Still Voltage In Main Circuit，This Plug Must Be Pulled Out To Cut Off General Supply.

·Do Not Pull Out Plug Of Battery During Driving Unless Emergency, Because It Can Lead Steering Malfunction.

3. Safety Issue

Safety is your business and responsibility. This section describes the basic safety regulations and warnings of typical forklift, but also applie to the vehicle which has special requirement of mast or accessaries

①. Operation Place and Working Environment

(1) Ground Conditions

Operation place of forklift should be firm ground with level surface, good ventilation is also needed.

Forklift operating performance depend on ground situation, moving speed should be regulated properly, becareful when driving on ramp or rough surface which can increase the wear condition of tyre and noise of forklift

(2) Working Environment Temperature

Working Environment Temperature: -20°C～40°C　　Humidity : Less Than 80％.

(3) Weather Condition

When it’s rainy, snowy, foggy or windy, to assess the safety before use forklift, the best is not to use for outdoor work, if must, driving and operation should be more carefully

②. safety Rules

Only qualified people who have been trained with driving license can operate the forklift

Put Fatigue Dress On Before Driving

Do Not Drive On Highway

Always On Guard Against Be Injured And Rescue

Do Not Change Parts On Forklift Arbitrary Without Permission
Read Operating Instruction Carefully Before Driving

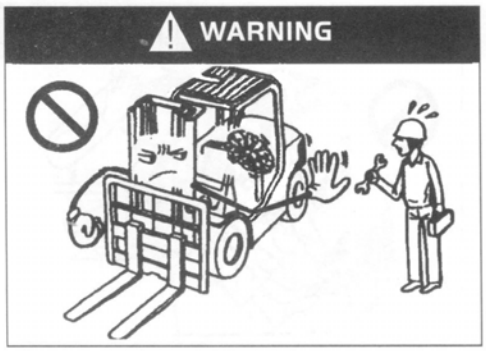

Turn Off Engine Before Maintenance

Understand Traffic Rules

Check Forklift Before Use !

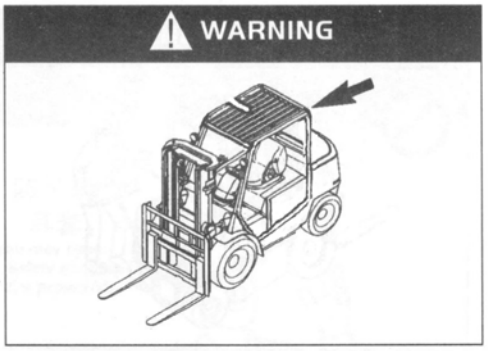

Do Not Move Overhead Guard

Keep Driving Cab Clean

Do Not Drive Unsafe Forklift

Driver Should Be Healthy

Ensure Your Forklift Is Safe

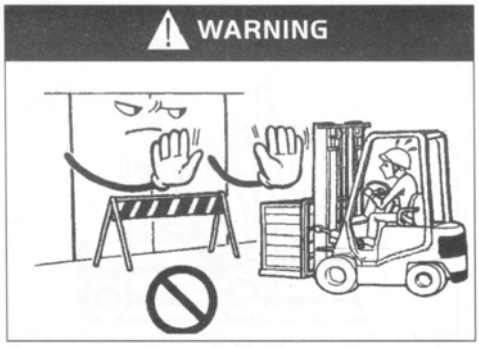

Work In Specified Area

Do Not Drive Damaged Forklift

Hold Armrest When Get On Forklift

Start Up Forklift Correctly

Adjust Seat Before Driving!

Ensure That Your Forklift Is In A Safe Operating State

Fasten Safety Belt Properly

Notice Height Of Working Area At Any Time

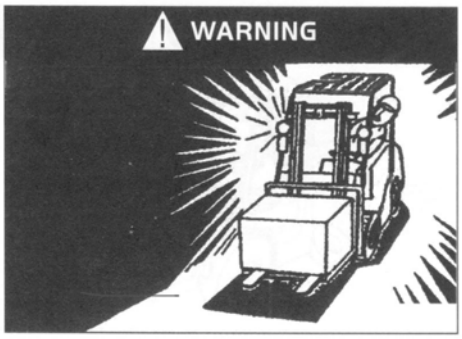

Turn On Illuminating Lamp In Gloom Area

Do Not Extend Arm And Body Out Of Overhead Guard

Do Not Drive On Soft Or Uncleaned Ground, Only Allowed To Run On Solid And Flat Ground .Keep Your Body Under Overhead Guard.

Avoid Eccentric Loading

Pay Attention Not To Encounter Item By Front Fork When Loading

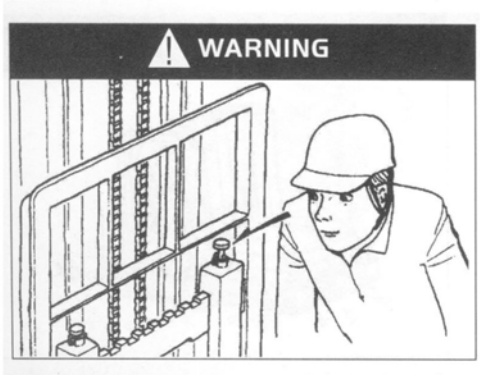

Check Position Of Locating Pin

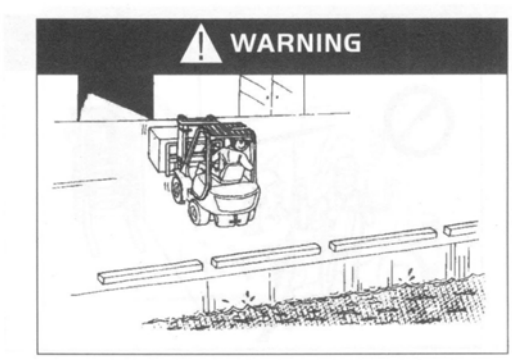

Pay Attention To Security Of Working Area

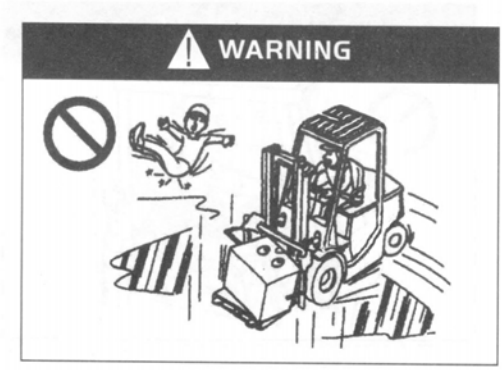

Do Not Move On Smooth Or Skid Ground

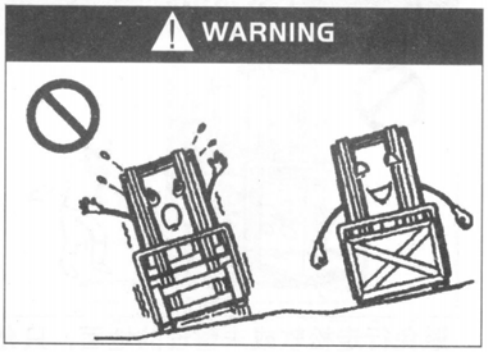

Pay Attention To The Stability Of Transverse Driving When Unloading

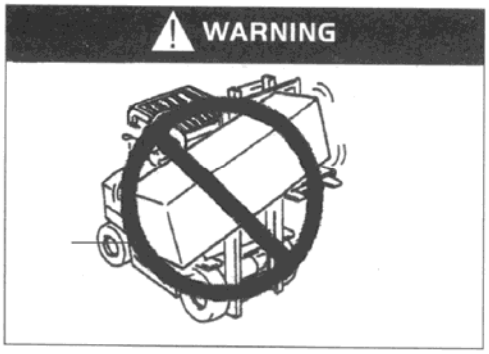

Be Especially Careful When Carrying Long Or Wide Cargo

Not Allowed To Carry People

If Can Not See The Front When Turning, Please Whistle And Drive Slowly.
Use Appropriate Pallet Or Sleeper When Carrying Small Object

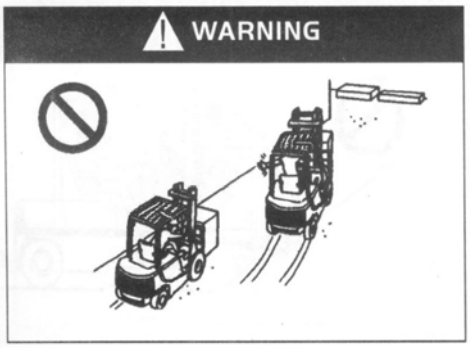

Do Not Chase Each Other Through The Traffic!

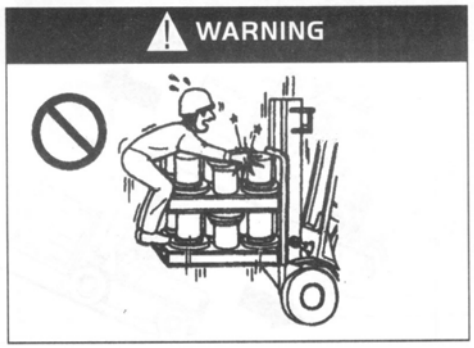

Not Allowed Anybody Stand On Goods

Don’T Gaze Around When Driving

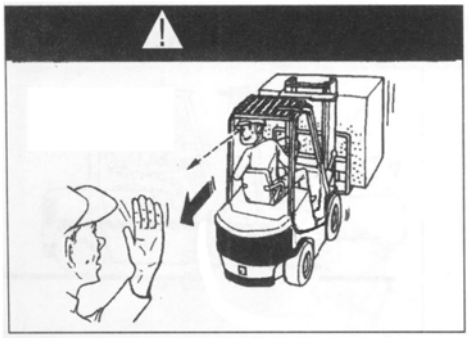

Don’T Act Stunt With Forklift

When Your Sight Is Blocked By High Load，Drive Backward Or Forward Under Direction Of Others
Observe Traffic Regulations As Well As All Warnings And Signs

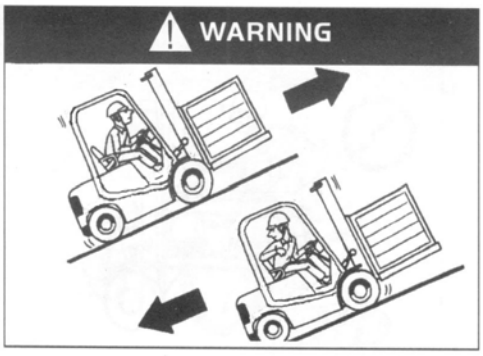

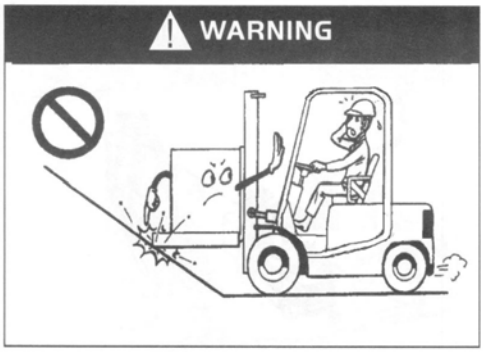

Drive Forward On Upgrade And Backward On Downgrade When Loading
When Upgrade，Pay Attention To The Steep Slope And Lifting Height Of Goods.

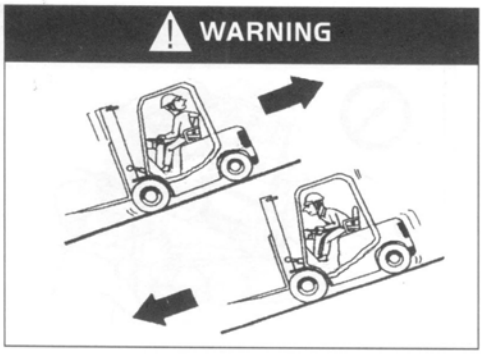

Drive Backward On Upgrade And Drive Forward On Downgrade When Unloaded
Notice To Brake When Start-Up Forklift On Slope

No Steering On Slope

Whistle To Alarm When There Is People Or Object On Road

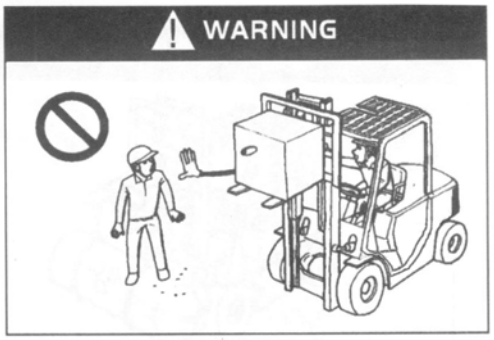

Pay Attention Not To Touch People Or Object When Steering
Do Not Approach To Forklift When Its Working

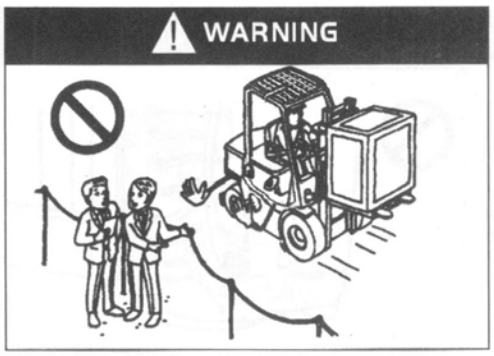

Driving Too Fast Will Result In Unstable Gravity Center And Overturning
Do Not Walk In Working Area

Pay Attention To The Variation Of Rated Load
Pay Attention To The Area Surrounding Forklift When Driving

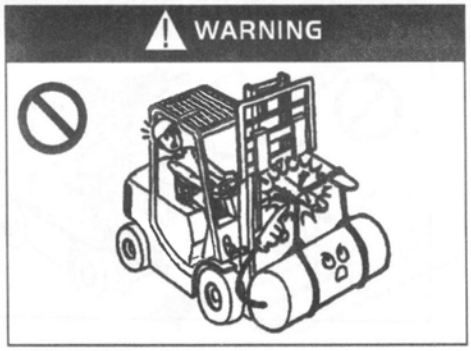

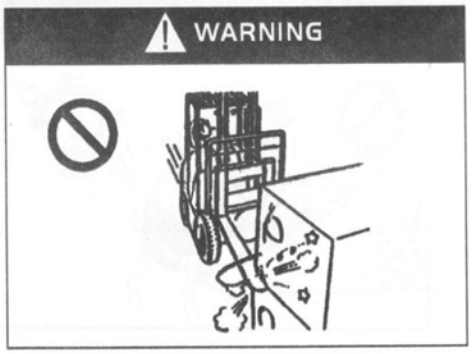

Select The Right Fork

Slow Down When Loading

Do Not Move Forklift When There Is People In The Front
No Walking Or Standing Under Lifted Fork

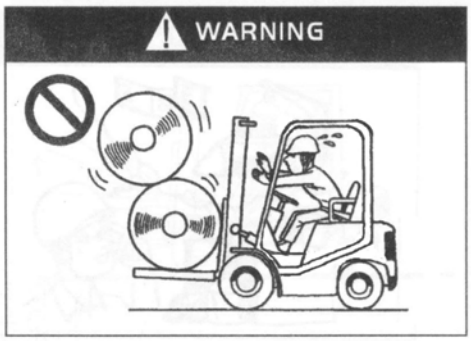

Try To Prevent Loads From Exceeding Backrest
Fasten The Goods Which Is Difficult To Bind Before Loading

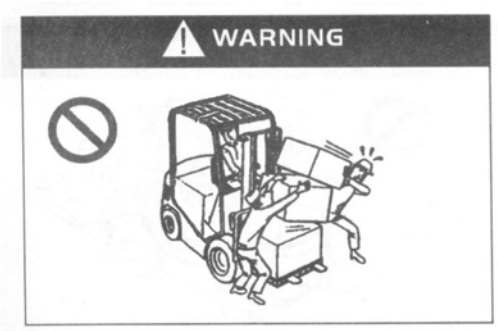

Do Not Convey Unloaded Goods On Forklift

Do Not Use Manpower To Carry Damaged Goods

Do Not Misuse Fork

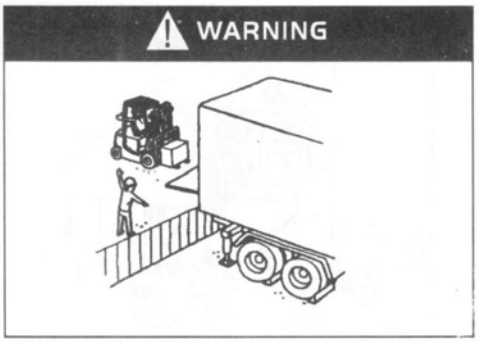

Be Careful When Loading Contanier

Do Not Lift People

Do Not Misuse Forklift!

Do Not Extend Any Part Of Your Body Out Of Vehicle During Moving

Drive Smoothly And Forbidden To Accelerate Or Decelerate Suddenly

Must Use Special Equipment To Lift People Safely To Work At Height

Do Not Overload

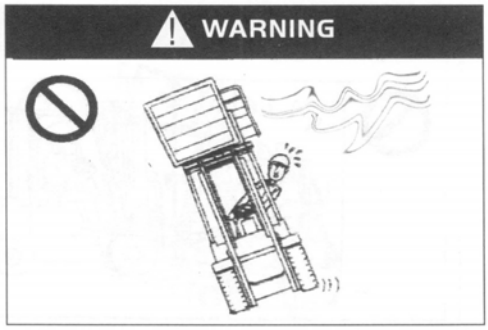

No Lifting In Strong Wind

No Operation Under Explosive Atmospheres

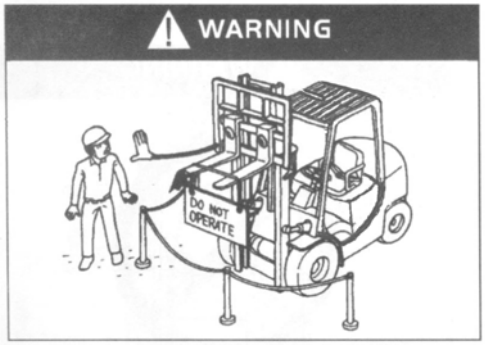

Park Damaged Forklift At Specified Area

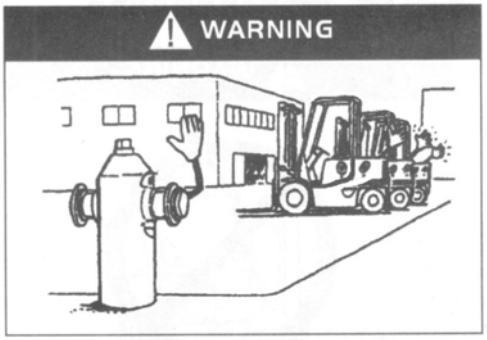

Park Unused Forklift At Specified Area

Forbidden To Park Forklift On Slope

When Forklift Is Not In Use, You Should
—Brake
—Push Direction Lever In Neutral Position
—Lower Fork To The Ground
—Tilt Gantry Mounting Forward
—Take Off Key

③. Transport Of Forklift

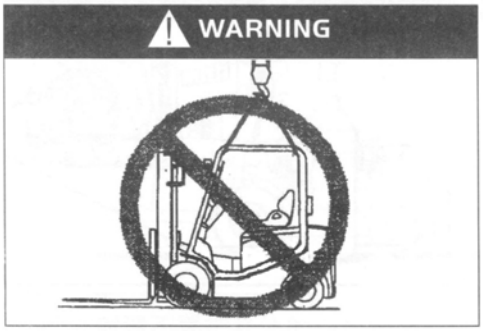

Forbidden To Hoist From Roof

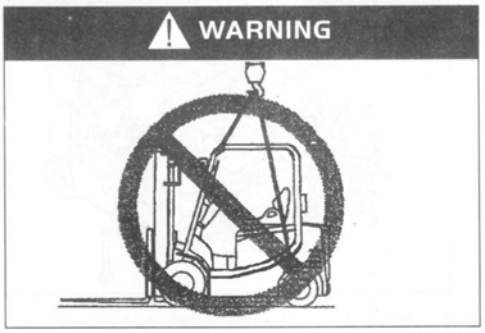

Forbidden To Hoist From Mast

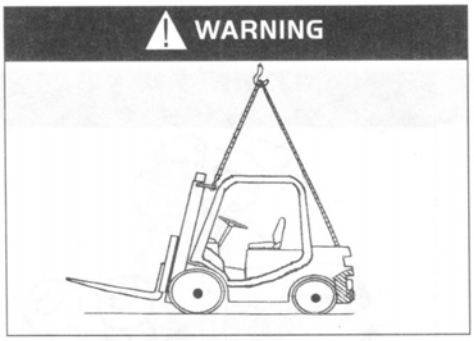

Correct Transport Of Forklift

hoist Forklift

·Tie steel cable firmly on two terminal holes of outer gantry mounting beam and traction bar, then hoist forklift with hoisting device. Steel cable which connected to counterweight should go out through the gap of overhead guard without exerting pressure on overhead guard.

⚠ **·When Hoisting Forklift，Don’T Wind Steel Cable Together With Overhead Guard**

Steel Cable And Hoisting Device Need To Be Strong Enough To Support Forklift Safely, Because Forklift Is Very Heavy

·Do Not Use Driving Cab（Overhead Guard） To Hoist Forklift
·Do Not Stand Under Hoisted Forklift

④. How to avoid overturning, how to protect yourself

Forbidden To Lift Load With Mast Tilting Forward To Prevent From Overturning
Forbidden To Lift Load With Mast Tilting Forward

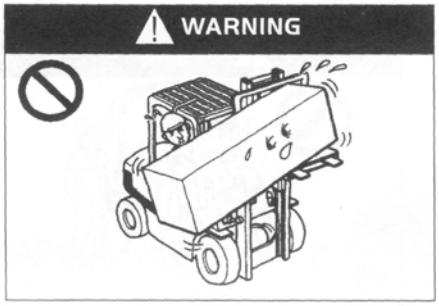

No Unbalance Loading

Try Not To Move On Smooth Ground

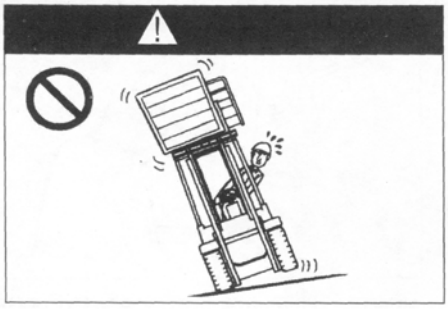

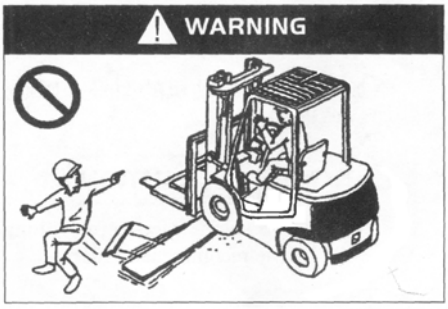

Do Not Load Or Unload When Forklift Is Not In Horizontal Position.
Forbidden To Move Through Obstacles Which Is Possible To Cause Overturning Such As Entrenchment，Hillock And Railway.

When Driving, Distance Between Fork And Ground Should Be Less Than 150-200mm. Avoid Fast And Big Radian Turning No Matter Its Loaded Or Unloadeded.

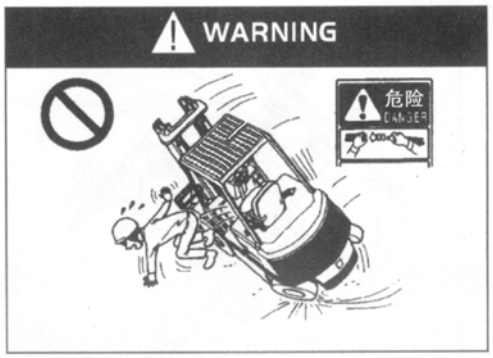

When Lifting With Unloaded,Please Turn At A Small Range To Avoid Overturning .
Do Fasten Safety Belt .

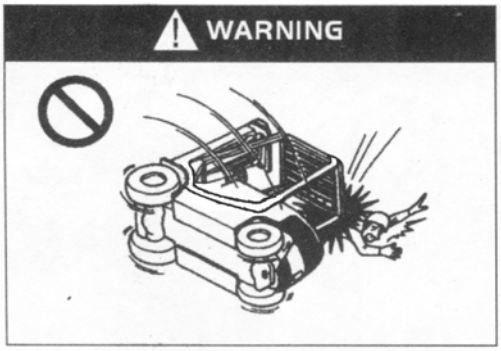

Do Not Jump Out Of Vehicle When Forklift Overturns

Wear Safety Helmet When Driving

⚠ **It Can Protect Yourself Better To Stay On Vehicle With The Help Of Safety Belt Than Jump Out Of Vehicle.If Forklift Begin To Overturn,Do As Following:**

1. **Step Down Firmly And Hold Steering Wheel Tightly**
2. **Don’T Jump Out Of Vehicle**
3. **Lean Your Body Toward To The Opposite Direction Of Overturning**
4. **Lean Your Body Forward**

⑤. Safety Matters During Maintenance

(1) Location Of Maintenance

⚠ **·Should Be Appointed Location Which Can Provide Service Organization With Enough Device And Security Protective Facilities**

·This Location Should Be Level Ground

·This Location Should Be Good In Ventilation

·This Location Should Have Fire Extinguishing Plant

(2) Attentions Before Maintenance

⚠ **·No Smoking**

·Wear All Kinds Of Protective Articles（Helmet，Shoes，Glasses，Gloves And Boot）And Suitable Clothes

·Wipe Away Effluent Oil

·Before Adding Lubricating Oil，Clean Up Dirty Oil Or Dust On Connectors With Brush Or Cloth

·In Addition To The Needs For Some Special Cases，Turn Off Ignition Key And Pull Out Battery Plug

·Lower The Fork To The Ground When Maintaining

·Clean Up Electric Elements With Compressed Air.

(3) Attentions Of Maintenance

⚠ **·Notice Not To Place Foot Under Fork，Do Not Be Tripped Over By Fork**

·When Fork Is Lifted，Place Cushion Block Or Other Object Under Inner Gantry Mounting To Prevent Fork And Gantry Mounting From Falling Down Suddenly.

·Open And Close Front Motherboard And Battery Box Cover Carefully To Prevent From Crash Finger.

·When Work Can Not Be Completed，Make A Mark To Avail Next Time Of Continuance

·Make Use Of Right Tools，Do Not Use Temporary Tools

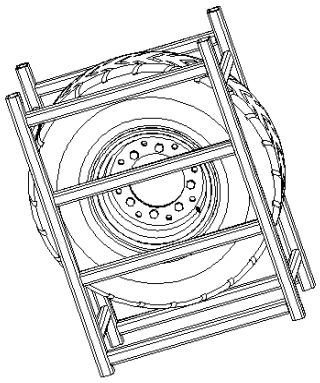

·Because There Is High Pressure In Hydraulic Circuit，So Don’T Carry Out Maintenance Before Reducing Inner Pressure Of Oil Pipe

·When Shocked By High-Votage, Serach For Medical Treatment Immediately

·Don’T Use Mast Assembly As Ladder.

·It Is Forbidden To Put Your Hands, Foot And Body Between Vehicle Frame And Gantry Mounting Assembly

(4) Inspect And Replace Tyre

⚠ **·Assembly And Disassembly Of Tyre Should Be Carried Out By Professional**

·High-Pressure Air Should Be Carried By Professional

·Wear Blinkers When Operating Compressed Air

·When Disassembling Tyre，Don’T Loosen Bolt And Nut In Wheel Rib Joint, Because There Is High-Pressure Air In Tyre，Looseness Of Bolt And Nut Can Cause Very Dangerous Situation

·You Must First Release The High-Pressure Air In Tyre Before Disassembling Bolt And Nut In Wheel Rib Joint ,Use Special Tools

(5) Use Jack（When Replacing Tyre）

⚠**·When Lifting Forklift With Jack，Don’T Bore Into Bottom Of Forklift**

·Ensure There Is No People Or Load On Forklift Before Lifting Forklift With Jack

·When Wheels Off The Ground，Stop Using Jack And Put Cushion Block Under It To Prevent Forklift From Falling Down

·Measures Should Be Taken To Prevent Forklift From Skidding Before Lifting Forklift With Jack，

(6) Requirments Of Waste Discharge(Electrolyte,Oil Ect）

⚠**·Scrapped Parts From Forklift (Plastic Parts, Electrical Elements, Etc.), Exhausted Liquid (Hydraulic Oil, Brake Fluid, Etc.) Should Be Recycled According To Local Government Stipulation，Randomly Emission Is Not Allowed**

⑥. Safety Matters When Using Battery

(1) No Smoking

⚠**·Battery Can Produce Hydrogen.Spark Will Be Generated When Short Circuit Happens Which Can Lead To Explosion And Fire When Litten Cigarette Approaches Battery**

(2) Protection From Electricity

⚠**·Battery Includes High Tension Electricity ， Don’T Touch Battery Conductor During Installation And Maintenance，Otherwise May Cause Serious Burn.**

(3) Connect Correctly

⚠**·No Opposite Connection Of Anode And Cathode In Battery Charging，Otherwise It May Lead To High Temperature，Burnt，Smoke And Explosion.**

(4) It Is Forbidden To Put Metal Object On Battery

⚠**·Short Circuit Will Happen If Anode Touch Cathode Caused By Bolt Or Tools, It Will Lead To Injury And Explosion**

(5) Forbidden To Over Discharge

⚠ **·Don’T Use Forklift Until It Cann’T Move， Otherwise Battery Lifespan Will Be Shorten.Charge Battery When Battery Capacity Alarming Light Continuous Blink.**

(6) Keep Clean

⚠ **·Keep Battery Surface Clean**

·Do Not Use Dry Cloth Or Chemical Fiber Cloth To Clean Battery Surface. Do Not Use Polyethylene Film To Cover Battery.

·Static Electricity Will Lead To Explosion

·Clean Uncovered Top Of Battery With Wet Cloth

(7) **Wear Protective Clothing**

⚠ **·Wear Blinkers，Rubber Gloves And Rubber Boots During Battery Maintenance**

(8) Battery Electrolyte Is Harmful

⚠ **·Battery Electrolyte Is Made Of Dilute Sulphuric Acid，Be Cautious During Transportation**

·It Will Lead To Blindness And Scald If Electrolyte Stick On Eye，Skin And Clothes.

(9) Emergency Disposal Method

⚠ **When Accident Occurs，Carry Out Emergency Treatment According To Following Method And Contact With Doctor As Soon As Possible**

·Electrolyte Splash On Skin：Clean With Water For 10-15min

·Electrolyte Splash To Eyes：Clean With Water For 10-15min

·Large-Area Contaminated：Counteract Electrolyte With Dry Soda （Baking Soda）Or Clean It Out With Water

·Swallow Electrolyte：Drink A Lot Of Water Or Milk

·Splash Electrolyte On Clothes：Take Off It Immediately

(10) Fasten Battery Upper Cover

⚠ **·Fasten Battery Upper Cover To Prevent Electrolyte From Leaking.**

·Notice Not To Infuse Too Much Of Electrolyte，Because Spilling Of Electrolyte Will Lead To

Leakage Of Electricity

(11) Waterproof

⚠ **·Battery Can’T Be Wetted By Rainwater Or Seawater，Or It Will Damage Battery Or Lead To Fire**

(12) Abnormal Phenomenon Of Battery

⚠ **Please Contact With Our Sales Department When The Battery Has Following Problems**

·Battery Smells
·Electrolyte Get Dirty
·Electrolyte Temperature Get Higher
·Too Fast Of Electrolyte Decreasing

(13) No Disassembling

⚠ **·Don’T Pump Electrolyte Out Of Battery**
·Don’T Disassemble Battery
·Don’T Repair Battery

(14) Storage

⚠ **·When Battery Is In Long-Term No Use，Deposite It To The Place With Well-Ventilated And Unlikely To Fire**

(15) Treatment Of Used Battery

⚠ **·Get Contact With Our Sales Department When Treating Used Battery**

⑦. Label

Labels on vehicle describe the usage and attentions of vehicle which not only takes you into consideration but also vehicle. Stick the label on again if they fall down

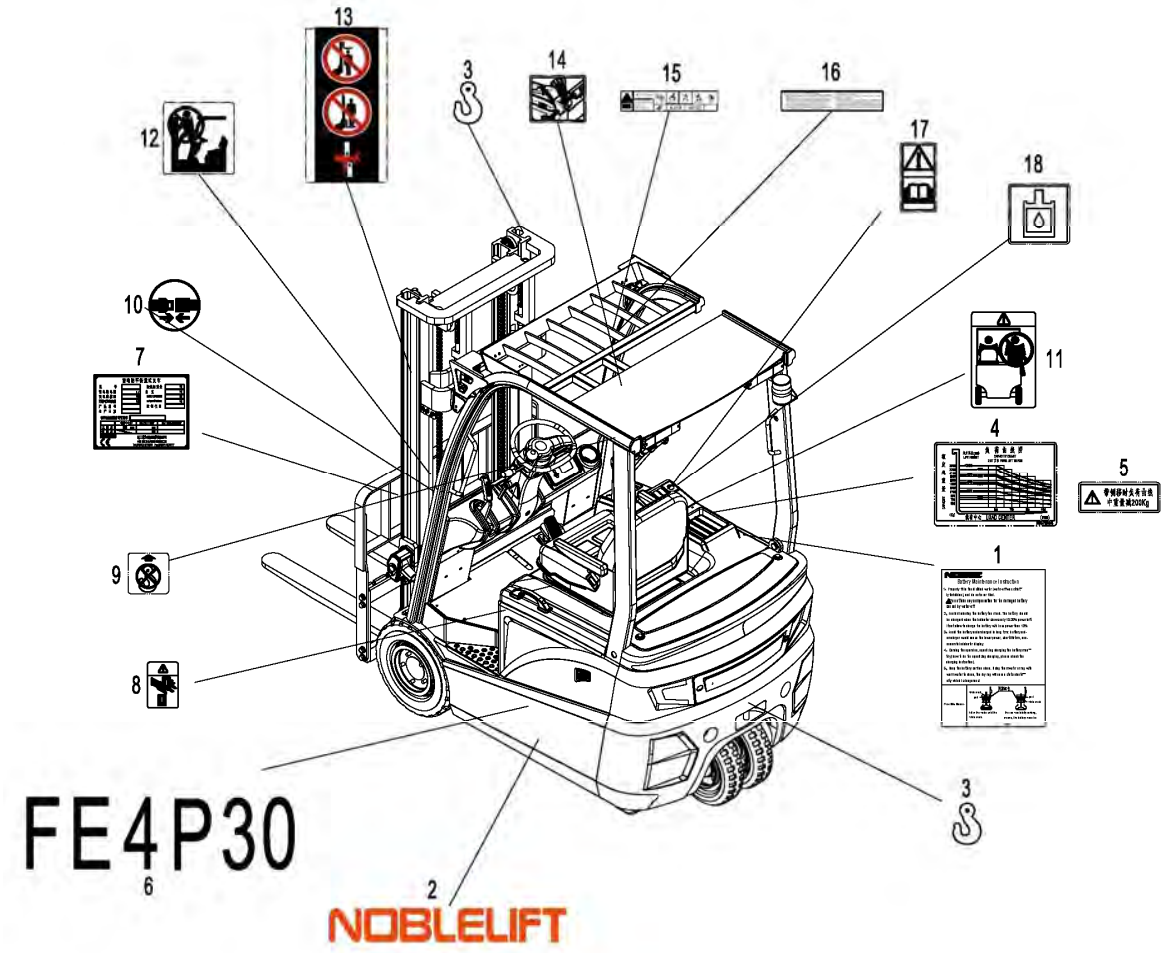

1. Battery notice for use
2. Manufacturer
3. Hoisting
4. Load curve
5. Sidesway
6. Model
7. Nameplate
8. Hand squeezing
9. No lifting
10. Safety belt
11. Prohibit seat
12. Prohibit climb
13. Prohibit to stand
14. Notice revolve
15. Safety alert
16. Safety Instructions
17. Reading tips
18. Hydraulic oil

Ⅴ Routine Check and Maintenance of Forklift

Checking forklift entirely beforehand can prevent forklift from malfunction and falling short of the lifespan it should has. Working hours stated in maintenance procedure is based on 8 hours per day and 200 hours per month of forklift, please follow maintenance procedure for safe operation.

Daily maintenance should be carried out by driver, other inspection and maintenance should be carried out by professional

1.Check Before Operation

To keep forklift in good condition and for safe operation, check forklift completely before operation，this is statutory duty, contact with us if you find any problem

⚠**·A Small Mistake Will Lead To One Serious Accident，So Don'T Operate Or Move Forklift Before It'S Been Completely Repaired And Inspected**

·Forklift Should Be Checked On Platform

·Turn Off Ignition Key And Pull Out Battery Plug Before Check Electrical System Of Forklift

·Improper Treatment（Discharge Into Downcomer，Soil，Burnt And So On）Of Waste Oil Will Pollute Water，Soil，Air And So On，Which Is Forbidden By Law.

①. Check Points and Check Contents

	No.	Check Points	Check Contents
Brake System	1	Brake Pedal	Travel and brake force of foot brake pedal
	2	Brake Oil	Volume and cleanliness
	3	Parking Brake	Travel and brake force of parking brake handle
Steering System	4	Steering Wheel Operation	Tension,steering,forward/backward movement
	5	Hydraulic Steering Operation	Running conditions of all parts
Hydraulic System and Mast	6	Function	Function，slit or not，lubricating state
	7	Oil Pipe	Whether the pipe leaks oil
	8	Hydraulic Oil	Appropriate oil mass
	9	Lifting Chain	Left chain and right chain should be equalize in tension
Wheel	10	Tyre	Pressure value，whether abnormal breakage.
	11	Wheel Nut	Tighten firmly
Battery	12	Charging	Determine the battery capacity display status,specific gravity, plug should be firmly connected.
Light，Horn And Switch	13	Head Light，Tail Light，Back Up Light，Steering Light，Horn And Emergency Button	Make break-make to check if light,horn and emergency button work normally
Testing and Displaying Light	14	Function	When connected to key switch it should display "test state normal"

Others	15	Overhead Guard，Backrest	Bolt， nut are tighten or not
	16	Name Plate And Sign	Integrality
	16	Other Parts	Abnormal or not

②. Check Procedure

(1) Check Brake Pedal⑦

Check brake condition to ensure when step down the pedal completely,the downward travel of brake pedal which is calculated from back plane should be more than 50mm, brake distance of forklift should be about 2.5m when unloaded

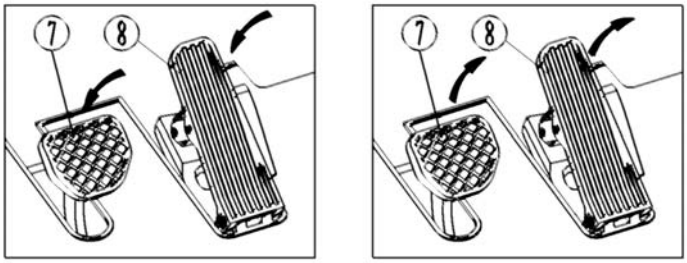

(2) Check Brake Oil

⚠ **·Open Brake Oil Cup Cap And Check Brake Oil Volume And Other Status.**

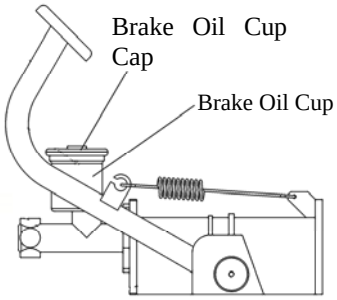

(3) Check parking brake handle
Push forward parking brake handle and observe following status.

·If there is proper pull travel
·Brake force value
·If there is damaged parts or not
If handle operating force is feasible for operator

Operator may adjust by a screw installed on the top of handle.

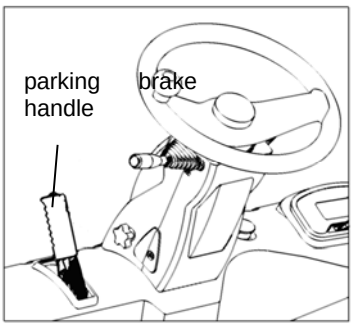

(4) Check steering status of steering wheel

Turn steering wheel clockwise and counterclockwise gently to check if there is rebounding，proper rebounding travel is about 50-100mm.turning travel of steering wheel is about ±7°.if the conditions mentioned above can be met，steering wheel is normal.

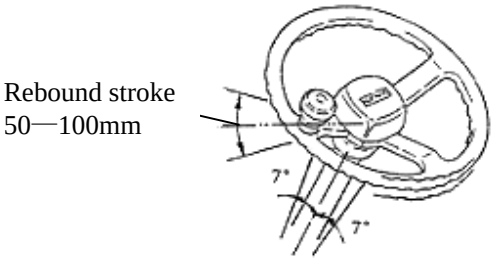

(5) Check power steering function

Turn steering wheel clockwise and counterclockwise to check working condition of power steering

(6) Check function of hydraulic system and mast

Check if lifting and tilting operation is smooth and normal.

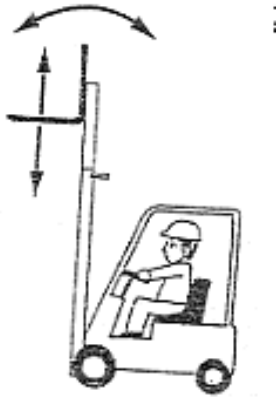

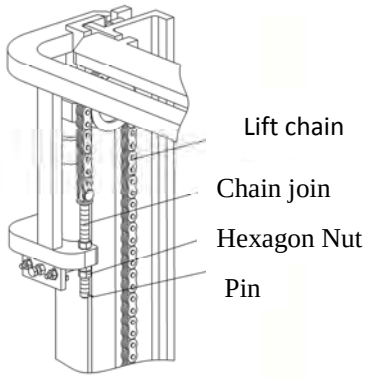

(7) Check oil pipe

Check if there is oil leakage in lifting cylinder，tilt cylinder and all pipeline.

(8) Check hydraulic oil

Lower fork down to the ground, check hydraulic oil level with oil meter. Hydraulic oil level is in good range within the limit of h-l，

model	H	L
FE3D16-20	20L	17L

(9) Check Lif Chain

Lift fork 200-300mm above ground，ensure the left chain and right chain are equalize in tension, check if cap bar finger is in neutral position， if tension is differeent,， adjust it through chian join

⚠ **·After Adjusting， Screw Down Double Nut**

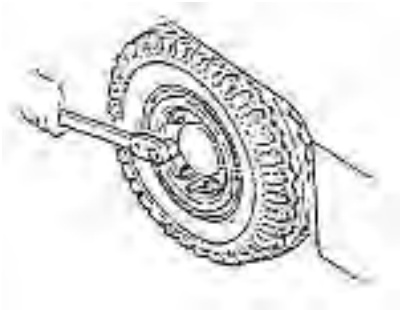

(10) Check Tyre（Solid Tyre）

Check if there is dehiscence or leakage on tyre and its side face, if there is deformation or damage on wheel rim and retainer

(11) Check wheel nut

⚠ **·Looseness Of Wheel Nuts Is Very Dangerous， In Case Of Looseness， Wheel Will Probably Fall Off Which Will Result In Vehicle Overturning. Check If There Is Looseness In Wheel Nuts， It Is Very Dangerous Even One Of Them Is Loosen， So Screw Them Down To The Rated Torque Value Beforehand.**

Wheel Nut Tightening Torque

Front Wheel：18×7-8　280-320n．M

Back Wheel：15×41/2-8　130-150n．M

(12) Check battery charging

Measure specific gravity of battery， when the specific gravity is between 1.275~1.285 at the temperature of 30℃ means battery has been fully charged.Check if there is looseness of connecting terminal and damage on cable conductor.

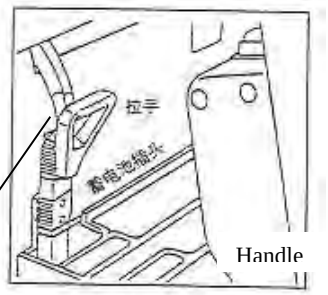

(13) Check head light, steering signal light and horn

Check if all lights and horn are working（horn begin to sound when pushing horn button down）

Check if emergency button is working

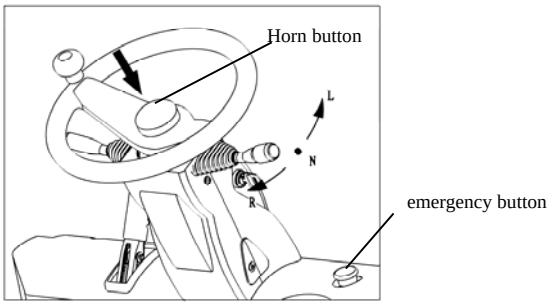

L	left Cornering Light Light On
N	Neutral Position
R	right Cornering Light Light On

(14) 检查仪表板功能 Check function of instrument board

Normally few seconds after turn ignition key on, instrument board displays as following.

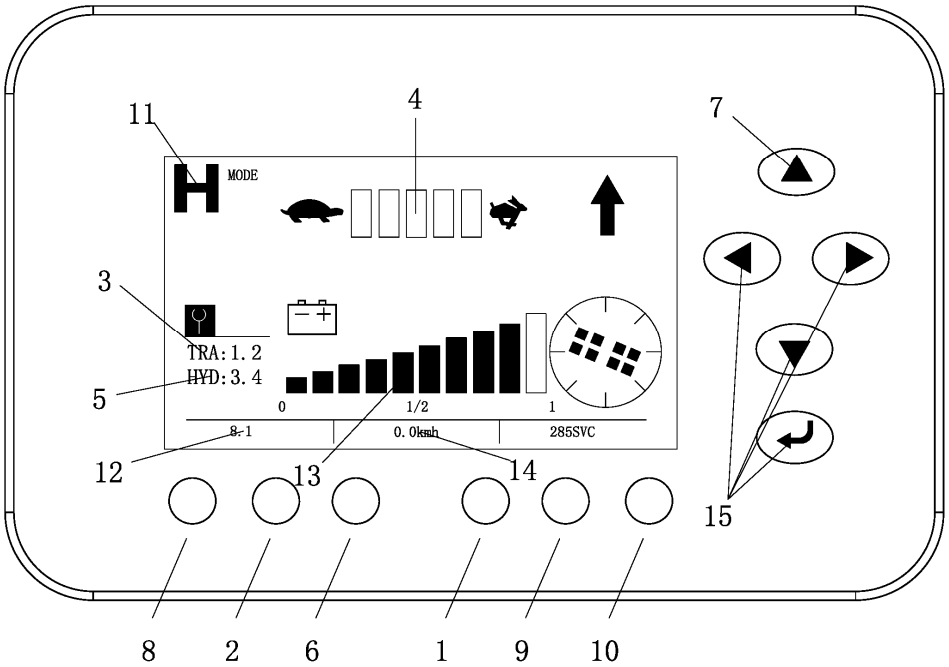

1. Tips locking instructions	2.parking brake insdicator	3.traction controller fault code	4.speed mode
5.oil pump controllerfault code	6.it's tome for maintanance	7.mode selection	8.slow speed mode
9.seat switch indication	10.electric quantity alarm indication	11.gear neutral indication	12.timing indication
13. electric quantity indication	14.speed indication	15.Model transformation and the parameter value adjustment buttons	

(15) check overhead guard and backrest

Check if there is looseness of bolt or nut

(16) Check integrality of vehicle signs

(17)Others

Check if there is abnormal of other parts

⚠**·Turn Off Ignition Key And Pull Out Battery Plug Before Checking Electrical System Except For Checking Light And Operating Condition**

2. Check after operation

Remove dirt on forklift and check as following after work

(1) Check if there is damage or leakage for all parts

(2) Check if there is deformation，torsion，damage or break

(3) Infuse lubricating grease according to request

(4) Lift fork to maximum height after work.(when fork haven't been lifted to the maximum height for daily use,this action can help oil to run through the whole cylinder to prevent forklift from rusting)

(5) Replace abnormal parts which can cause malfunction during work.

⚠·A Small Mistake Will Lead To One Serious Accident，So Don'T Operate Or Move Forklift Before It'S Been Completely Repaired And Inspected

3. Forklift Cleaning

⚠ **·Park Forklift In Specified Area**
·Pull Up Parking Brake Handle
·Press Down Emergency Button
·Switch Off Ignition Key And Take It Off
·Pull Out Battery Plug

① Forklift surface cleaning

⚠ **Don'T Clean Forklift With Flammable Fluid，Take Safety Measures To Prevent Short Circuit.**

·Clean forklift with water and soluble abluent
·Clean oil filter and periphery of grease tap carefully

If Clean Forklift Often，Please Lubricate In Time

② Chain Cleaning

⚠ **Don'T Use Corrosive Liquid Such As Chemical Abluent，Acidic Liquid Etc To Clean The Chain**

·Place a container under mast

·Use petrochemical derivatives such as gasoline to clean the chain

·Do not add any additive when cleaning with steam nozzle.
·Wipe off water stain on the surface of pin roll and chain after cleaning

③. Electrical System Cleaning

⚠ **Don'T Clean Pump Controller And All Kinds Of Connector With Water To Prevent Electrical System From Damage.**

Use non-metal brush or low-power blower to clean electrical system according to the instruction from manufacturer，don't move protecting cover.

④. After Cleaning

·Wipe off water stain on forklift（like use compressed air）
·Start up forklift according to the procedure

⚠ **If There Is Dampness Leaks Through Motor，Remove It To Prevent Short Circuit.**

Damp Will Degrade The Performance Of Brake，Brake Forklift Shortly And Repeatedly Can Keep Brake Device Dry.

4. Routine Maintenance

·Forklift needs to be inspected and maintained regularly to keep good performance.
·Use standard spare parts from noblelift.
·Always use same type of oil when replacing or adding oil
·Oil and battery has been replaced can not be dumped and abandoned randomly，it should be managed according to the law of environmental protection of local government.

·Institute a thorough maintenance project
·Make integrate record after maintenance
·No repairing of forklift without training

⚠ **·No Fireworks**

·Before Maintenance，Switch Off Ignition Key And Pull Out Battery Plug.（Except For Part Malfunction Elimination）

·Clean Electrical Parts With Compressed Air，Don't Use Water.

·Don'T Extend Hand，Feet Or Any Part Of Body Between Gantry Mounting And Dial Holder.

·Even Ignition Key Switched Off，There Is Still Electricity In Controller Capacitor，So Becareful Not To Be Shocked By Electricity When Touching Controller.

① Routine Maintenance Schedule

(√ Check, Proofread and Correct,Adjust × Replace)

（1）battery

Maintain Items	Maintain Contents	Tools	Every Day (8 Hours)	Every Week (50hours)	Every Month (200hours)	Every 3 Month (600hours)	Every 6 Month (1200hours)
battery	Electrolyte Level	Visual Measurement		√	√	√	√
	Electrolyte Specific Gravity	Density Meter		√	√	√	√
	Battery capacity		√	√	√	√	√
	Whether connecting terminal is loose		√	√	√	√	√
	Whether connecting line is loose		√	√	√	√	√
	Cleaness of battery surface		√	√	√	√	√

	Whether tools on battery surface		√	√	√	√	√
	Whether ventilation cover is tighten , ventilator scoop is unblocked			√	√	√	√
	Far away from fireworks		√	√	√	√	√

（2）Controller

Maintain Items	Maintain Contents	Tools	Every Day (8 Hours)	Every Week (50hours)	Every Month (200hours)	Every 3 Month (600hours)	Every 6 Month (1200hours)
Controller	Check wear condition of contactor					√	√
	Check whether mechanical motion of contactor is ok					√	√
	Check whether pedal microswitch is ok					√	√
	Check whether connecting between motor，battery and power unit are ok					√	√
	Check whether failure judgment system is normal						first 2 Years

（3）Motor

Maintain Items	Maintain Contents	Tools	Every Day (8 Hours)	Every Week (50hours)	Every Month (200hours)	Every 3 Month (600hours)	Every 6 Month (1200hours)

Motor	clean foreign matter on motor casing				√	√	√
	clean or replace bearing						√
	Whether carbon brush , commutator is worn, whether spring force is normal				√	√	√
	Whether connection is correct and reliable				√	√	√
	Flush carbon dust in commutator bar groove and on surface					√	√

（4）Drive System

Maintain Items	Maintain Contents	Tools	Every Day (8 Hours)	Every Week (50hours)	Every Month (200hours)	Every 3 Month (600hours)	Every 6 Month (1200hours)
Gear box and reducing mechanism	Noise or not		√	√	√	√	√
	Check leakage		√	√	√	√	√
	换油 replace oil						×
	Check working condition of arrester		√	√	√	√	√
	Check working condition of gear					√	√
	Check looseness of bolt connected to the gantry mounting				√	√	√
	Check tightening torque of wheel hub bolt	Tension Wrench	√	√	√	√	√

（5）Wheel (Front and Back Wheel)

Maintain Items	Maintain Contents	Tools	Every Day (8 Hours)	Every Week (50hours)	Every Month (200hours)	Every 3 Month (600hours)	Every 6 Month (1200hours)
Tye	Whether there is wear,leakage or damage		√	√	√	√	√
	Whether there is nail， stone or other foreign matter on tyre				√	√	√
	Damage of wheel rim		√	√	√	√	√

（6）Steering System

Maintain Items	Maintain Contents	Tools	Every Day (8 Hours)	Every Week (50hours)	Every Month (200hours)	Every 3 Month (600hours)	Every 6 Month (1200hours)
Steering wheel	Check clearance		√	√	√	√	√
	Check looseness of axile direction		√	√	√	√	√
	Check looseness of radial direction		√	√	√	√	√
	Check operating condition		√	√	√	√	√
Steering device and valve block	Check loosenness of construction bolt				√	√	√
	Check leakage of interface between valve block and steering device		√	√	√	√	√
	Check tension of all connector		√	√	√	√	√
Rear axle	Check loosenness of construction bolt of rear axle				√	√	√
	Check bending，deformation ，leakage and damage				√	√	√
	Check or replace the lubrication of bridge bearing					√	√

	Check or replace the lubrication of steering wheel hub bearing					√	√
	Check operating condition of steering cylinder		√	√	√	√	√
	Check leakage of steering cylinder		√	√	√	√	√
	Check connecting of pinion and rack					√	√
	Check connecting and working condition of sensor					√	√

（7）Brake System

Maintain Items	Maintain Contents	Tools	Every Day (8 Hours)	Every Week (50hours)	Every Month(200hours)	Every 3 Month (600hours)	Every 6 Month (1200hours)
Brake pedal	Empty travel	Dividing Ruler	√	√	√	√	√
	Pedal travel		√	√	√	√	√
	Operating condition		√	√	√	√	√
	Whether there is air in brake pipeline		√	√	√	√	√
Parking brake operation	Whether brake is safe and reliable with enough travel		√	√	√	√	√
	Manoeuvrability		√	√	√	√	√
Lever and inhaul cable etc	Manoeuvrability				√	√	√
	Whether connecting is loose				√	√	√
	Wear condition of connection to reducer casing					√	√

pipeline	Damage , leakage , rupture				√	√	√
	Connection, clamping ,looseness				√	√	√
Brake gantry mountinger cylinder and wheel cylinder	leakage		√	√	√	√	√
	Check oil level and replacement		√	√	√		×
	Motion of brake gantry mountinger cylinder and wheel cylinder					√	√
	Leakage and damage of brake gantry mountinger cylinder and wheel cylinder					√	√
	Wear condition of piston cup,one-way valve of brake gantry mountinger cylinder and wheel cylinder ,replacement						×

（8）Hydraulic System

Maintain Items	Maintain Contents	Tools	Every Day (8 Hours)	Every Week (50hours)	Every Month (200hours)	Every 3 Month (600hours)	Every 6 Month (1200hours)
Hydraulic oil tank	Oil mass check and replacement		√	√	√	√	×
	Clean oil-absorbing filter element						√
	Eliminate foreign matter						√
Controlling valve rod	Whether connecting is loose		√	√	√	√	√
	Operating condition		√	√	√	√	√

Multiway valve	Oil Leakage		√	√	√	√	√
	Operating condition of safety valve, inclined valve, self-locking valve				√	√	√
	Measure safety valve pressure	Oil pressure meter					√
Tube fitting	Whether there is leakage , looseness , rupture , deformation , damage				√	√	√
	Replace pipe						× 1～2 years
Hydraulic pump	Whether oil leakage or noise in hydraulic pump		√	√	√	√	√
	Wear condition of hydraulic pump driving gear				√	√	√

（9）Lifting System

Maintain Items	Maintain Contents	Tools	Every Day (8 Hours)	Every Week (50hours)	Every Month (200hours)	Every 3 Month (600hours)	Every 6 Month (1200hours)
Chain and chain wheel	Check tension of chain,whether there is deformation,damage or rustiness on chain		√	√	√	√	√
	Lubricate chain				√	√	√
	Check looseness of riveting studs				√	√	√
	Check whether there is deformation,damage on chain wheel				√	√	√
	check looseness of wheel shaft				√	√	√
Accessaries	Whether in normal condition or not				√	√	√
Lifting cylinder and tilt cylinde	Whether there is looseness, deformation,damage on piston, piston rod thread and connection		√	√	√	√	√

r	Operating condition		√	√	√	√	√
	Leakage		√	√	√	√	√
	Check wear,damage on pin and steel-backed bearing				√	√	√
fork	Whether there is deformation, wear ,damage on fork				√	√	√
	Wear condition of locating pin					√	√
	Check whether there is dehiscence or wear on welding position of root part of fork				√	√	√
Mast and fork carrier	Check whether there is dehiscence or damage on inner gantry mounting ,outer gantry mounting and welding part of beam				√	√	√
	Check whether there is poor weld, dehiscence or damage on welding part between tilt cylinder bracket and gantry mounting				√	√	√
	Check whether there is poor weld, dehiscence or damage on inner,outer gantry mounting				√	√	√
	Check whether there is poor weld, dehiscence or damage on fork carrier				√	√	√
	Check whether roller is loose				√	√	√
	Check wear condition,damage on gantry mounting supporting bearing pad						√
	Check whether bolt of gantry mounting supporting cover is loose	Testing hummer			√		√
	Check whether head bolt and bending board bolt of lifting cylinder piston are loose	Testing hummer			√		√
	Check dehiscence, damage on roller,roller shaft and welding part				√	√	√

（10）Others

Maintain Items	Maintain Contents	Tools	Every Day (8 Hours)	Every Week (50hours)	Every Month (200hours)	Every 3 Month (600hours)	Every 6 Month (1200hours)
Over head guard	Whether installation	Testing hummer	√	√	√	√	√
	Check whether there is deformation, dehiscence, damage		√	√	√	√	√
Steering indicator	Installation and working condition		√	√	√	√	√
Horn	Installation and working condition		√	√	√	√	√
Light and lamp bulb	Installation and working condition		√	√	√	√	√
Warning buzzer	Installation and working condition		√	√	√	√	√
Instrument	Working condition of instrument		√	√	√	√	√
Wire	Check damage and looseness of cable			√	√	√	√
	Check looseness of electrical circuit connection				√	√	√

② Routine replacement of main safety parts

Damnification or damage of some parts is difficult to detect through routine maintenance，users should replace the parts presented by following list for further improvement of safety.

If these parts shows abnormal before replacing time， replace them immediately.

Name of key safety part	Tenure Of Use(Year)
Flexible/hard brake hose	L～2
Rubber hose for lifting system	L～2
Lifting chain	2～4
High-pressure hose for hydraulic system	2
Oil cup of brake fluid	2～4
Cylinder cover and dust cover of brake cylinder	1
Inner seal components and rubber components of hydraulic system	2

5、Lubricating area and recommended grease

①. Lubricating area

○：Replace　　Fo：Hydraulic Oil
○：Supply　　Go：Gear Oil
□：Inspect and Adjust　　Cg：Lubricating Grease
Bo：Brake Fluid　　W：Distilled Water

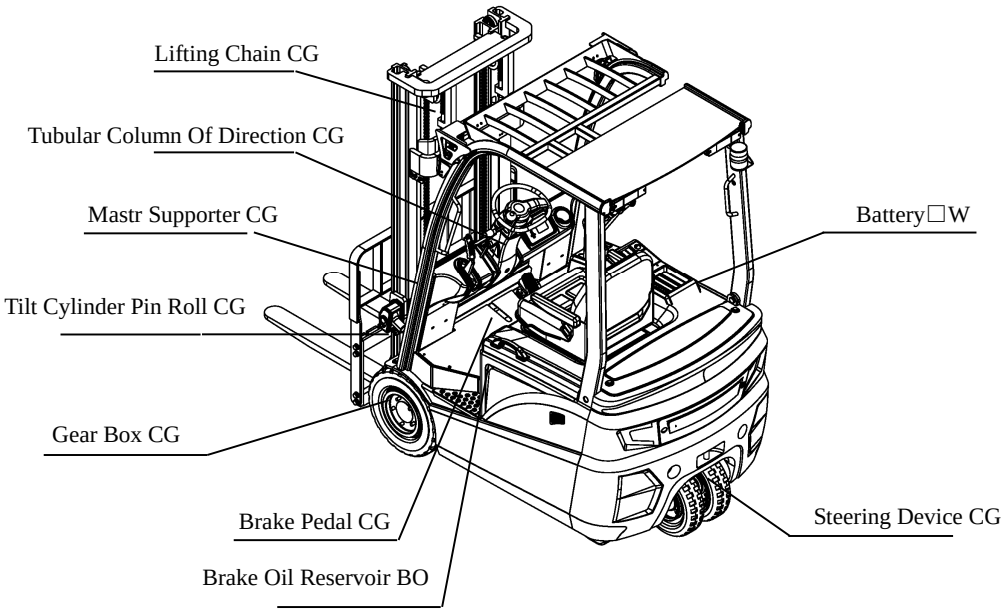

②Recommended Grease

Name	Mark,code	Capacity(L)	Remark
Hydraulic oil	L-HM32	28	≥-5℃
	L-HV32		≥-20℃
Gear oil	ATF220	4.5	
Brake fluid	DOT4	0.2	
Industrial vaseline	2#		Battery pole piece
Lubricating Grease	Universal lithium base Grease for automobile		

Maintenance record

No.	Date	Maintenance content	Noter

Noblelift North America
2461 S. Wolf Road
Des Plaines, IL 60018
T: 847-595-7100 F: 847-595-7200
parts@nobleliftna.com
www.nobleliftna.com