DHC Series

Disc Harrow

Publication #: August 2019

TO THE DEALER:

Assembly and proper installation of this product is the responsibility of the Tar River dealer. Read manual instructions and safety rules. Make sure all items on the Dealer's Pre-Delivery and Delivery Check Lists in the Owner's/Operator's Manual are completed before releasing equipment to the owner.

The dealer must complete the Warranty Registration located on page 16 and mail to Tufline

TO THE OWNER:

Read this manual before operating your Tar River equipment. The information presented will prepare you to do a better and safer job. Keep this manual handy for ready reference. Require all operators to read this manual carefully and become acquainted with all the adjustment and operating procedures before attempting to operate. Replacement manuals can be obtained from your selling dealer.

The equipment you have purchased has been carefully engineered and manufactured to provide dependable and satisfactory use. Like all mechanical products, it will require cleaning and upkeep. Lubricate the unit as specified. Observe all safety information in this manual and safety decals on the equipment.

For service, your authorized Tar River dealer has trained mechanics, genuine Tar River service parts, and the necessary tools and equipment to handle all your needs.

Use only genuine Tar River service parts. Substitute parts will void the warranty and may not meet stan-dards required for safe and satisfactory operation. Record the model number and serial number of your equipment in the spaces provided:

Model:_____ Date of Purchase:_____

Serial Number: (see Safety Decal section for location)_____

Provide this information to your dealer to obtain correct repair parts.

Throughout this manual, the term IMPORTANT is used to indicate that failure to observe can cause damage to equipment. The terms CAUTION, WARNING and DANGER are used in conjunction with the Safety-Alert Symbol, (a triangle with an exclamation mark), to indicate the degree of hazard for items of personal safety.

⚠	This Safety-Alert Symbol indicates a hazard and means ATTENTION! BECOME ALERT! YOUR SAFETY IS INVOLVED!
DANGER	Indicates an imminently hazardous situation that, if not avoided, will result in death or serious injury.
⚠ WARNING	Indicates a potentially hazardous situation that, if not avoided, could result in death or serious injury, and includes hazards that are exposed when guards are removed.
⚠ CAUTION	Indicates a potentially hazardous situation that, if not avoided, may result in minor or moderate injury.
IMPORTANT	Indicates that failure to observe can cause damage to equipment.
NOTE	Indicates helpful information.

TABLE OF CONTENTS

INTRODUCTION ii

SPECIFICATIONS 1

SAFETY DECALS 2

SAFETY RULES . . . . . 3 - 6

PARTS CATALOG 7-10

OPERATION 11

ADJUSTMENT 12

MAINTENANCE 13

BOLT SIZE AND BOLT TORQUE CHART. 14

TROUBLE SHOOTING 15

WARRANTY 16-17

WARRANTY REGISTRATION. 18

SPECIFICATIONS

TME SERIES - FRICTION BEARING - 1” SQUARE

Model #	Blades	Spacing	Cut Width	Weight
1TME71618F	16-18″	7 1/2″	5′ 6″	598#
1TME72018F	20-18″	7 1/2″	6′ 8″	616#

TME BF SERIES - BEARING/FLANGETTE MOUNT - 1” SQUARE

Model #	Blades	Spacing	Cut Width	Weight
1TME71618BF	16-18″	7 1/2″	5′ 6″	606#
1TME72018BF	20-18″	7 1/2″	6′ 8″	708#
1TME91618BF	16-18″	9″	6′ 4″	647#

GENERAL INFORMATION

The purpose of this manual is to assist you in operating and maintaining your Tar River DISC. Read it carefully. It furnishes infor-mation and instructions that will help you achieve years of dependable perfor-mance.

These instructions have been compiled from field experience and engineering data. Some information may be general in nature, due to unknown and varying oper-ating conditions. However, through experi-ence and these instructions, you should be able to develop procedures suitable to your particular situation.

The illustrations and data used in this manual were current at the time of print-ing. However, due to possible in line pro-duction changes, your machine may vary slightly in detail. We reserve the right to redesign and change the machines as may be necessary without notification.

Throughout this manual, references are made to right and left direction. These are determined by standing behind the disc facing the direction of forward travel.

SAFETY & INSTRUCTIONAL DECALS

ATTENTION! BECOME ALERT! YOUR SAFETY IS INVOLVED!

FAILURE TO FOLLOW THESE INSTRUCTIONS COULD RESULT IN SERIOUS INJURY OR DEATH

Replace Decals Immediately If Damaged!

Check that all safety decals are installed and in good condition. Replace if decals are worn or damaged. Replacement Part numbers are listed here.

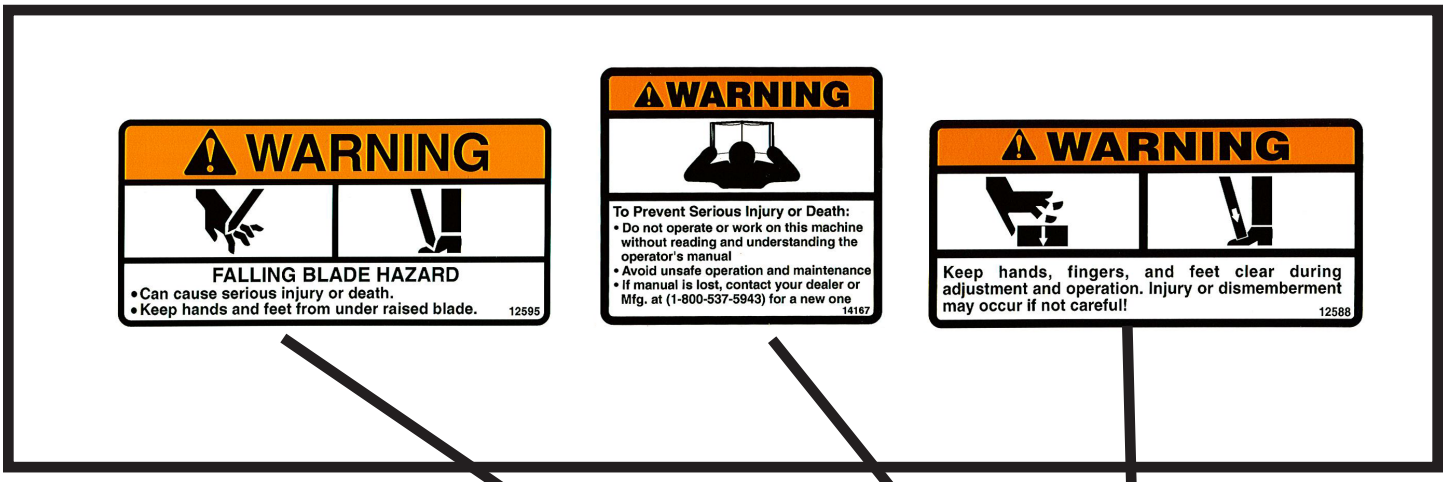

SATETY RULES

ATTENTION! BECOME ALERT! YOUR SAFETY IS INVOLVED!

Safety is a primary concern in the design and manufacture of our products. Unfortunately, our efforts to provide safe equipment can be wiped out by an operator's single careless act.

In addition to the design and configuration of equipment, hazard control and accident prevention are dependent upon the awareness, concern, judgement, and proper training of personnel involved in the operation, transport, maintenance and storage of equipment.

It has been said "The best safety device is an informed, careful operator."We ask you to be that kind of operator.

TRAINING

• Safety instructions are important! Read all attachment and power unit manuals; follow all safety rules and safety decal information. (Replacement manuals are available from selling dealer.) Failure to follow instructions or safety rules can result in serious injury or death.

• If you do not understand any part of this manual and need assistance, see your dealer.

• Operators must be instructed in and be capable of the safe operation of the equipment, its attachments, and all controls. Do not allow anyone to operate this equipment without proper instructions.

• Never allow children or untrained persons to operate equipment.

• Train all new personnel and review instruction's frequently with existing workers. A person who has not read and understood all operating and safety instructions is not qualified to operate the machine. An untrained operator exposes himself and bystanders to possible serious injury or death.

• Keep hands and body away from pressurized lines. Use paper or cardboard, not hands or other body parts to check for leaks. Wear safety goggles. Hydraulic fluid under pressure can easily penetrate skin and will cause serious injury or death.

• Make sure that all operating and service personnel know that if hydraulic fluid penetrates skin, it must be surgically removed as soon as possible by a doctor familiar with this form of injury or gangrene, serious injury, or death will result.

CONTACT A PHYSICIAN IMMEDIATELY IF FLUID ENTERS SKIN OR EYES. DO NOT DELAY.

PREPARATION

• Always wear relatively tight and belted clothing to avoid getting caught in moving parts. Wear sturdy, rough-soled work shoes and protective equipment for eyes, hair, hands, hearing, and head; and respirator or filter mask where appropriate.

• Make sure attachment is properly secured, adjusted, and in good operating condition.

• Air in hydraulic systems can cause erratic operation and allows loads or equipment components to drop unexpectedly. When connecting equipment or hoses or performing any hydraulic maintenance, purge any air in hydraulic system by operating all hydraulic functions several times. Do this before putting into service or allowing anyone to approach the equipment.

• Route hydraulic hoses carefully to prevent damage. Hoses must not be twisted, bent

PREPARATION (cont'd)

sharply, kinked, frayed, pinched, or come into contact with any moving parts. Operate moveable components through full operational range to check clearances. Replace any damaged hose immediately.

• Do not connect a low-pressure hydraulic hose into a high-pressure system—it will burst the hose. Do not use a high-pressure hose in place of a low-pressure hose—it is possible to rupture the valve.

• Power unit must be equipped with ROPS or ROPS cab and seat belt. Keep seat belt securely fastened. Falling off power unit can result in death from being run over or crushed. Keep foldable ROPS system in "locked up" position at all times.

• Do not exceed this implements transport speed of 20 mph (32 kmh). Exceeding this speed may cause loss of control during transport or braking and serious injury or death.

• Transport only with a properly ballasted tractor and a properly attached safety tow chain.

• Do not transport with a motor vehicle.

• Reduce speed and use additional caution when on inclines, towing when on adverse surface conditions, and turning.

TRANSPORTATION

• Always comply with all state and local laws governing highway safety and lighting and marking requirements.

• Never allow riders on power unit or attachment.

• Do not operate or transport on steep slopes.

• Use extreme care and reduce ground speed on slopes and rough terrain.

• Do not operate or transport equipment while under the influence of alcohol or drugs. Consult your doctor about operating this machine while taking prescription medications.

OPERATION

• Never go underneath equipment in the raised or transport position unless the transport lock is in place. Never place any part of the body underneath equipment or between moveable parts even when the engine has been turned off.

• Hydraulic system leak down, hydraulic system failures, mechanical failures, or movement of control levers can cause equipment to drop or rotate unexpectedly and cause severe injury or death.

• Always comply with all state and local laws governing highway safety and lighting and marking requirements.

• Do not exceed this implements transport speed of 20 mph (32 kmh). Exceeding this speed may cause loss of control during transport or braking and serious injury or death.

• Transport only with a properly ballasted tractor and a properly attached safety tow chain.

• Do not transport with a motor vehicle.

• Reduce speed and use additional caution when on inclines, towing when on adverse surface conditions, and turning.

• Operate only in daylight or good artificial light.

• Keep bystanders away from equipment.

OPERATION (cont'd)

• Keep hands, feet, hair, and clothing away from equipment while engine is running. Stay clear of all moving parts.

• Power unit must be equipped with ROPS or ROPS cab and seat belt. Keep seat belt securely fastened. Falling off power unit can result in death from being run over or crushed. Keep foldable ROPS system in "locked up" position at all times.

• Never allow riders on power unit or attachment.

• Always sit in power unit seat when operating controls or starting engine. Securely fasten seat belt, place transmission in neutral, engage brake, and ensure all other controls are disengaged before starting power unit engine.

• Look down and to the rear and make sure area is clear before operating in reverse.

• Use extreme care when working close to fences, ditches, other obstructions, or on hillsides.

• Do not operate or transport on steep slopes.

• Do not stop, start, or change directions suddenly on slopes. Always operate down slopes; never across the face.

• Use extreme care and reduce ground speed on slopes and rough terrain.

• Keep alert and watch the front as well as the rear when operating.

• Always relieve the pressure on the hydraulic lift system before performing service or maintenance on any hydraulic components. Failure to do so may cause serious injury from injection of pressurized hydraulic fluid.

• Air in hydraulic systems can cause erratic operation and allows loads or equipment components to drop unexpectedly. When connecting equipment or hoses or performing any hydraulic maintenance, purge any air in hydraulic system by operating all hydraulic functions several times. Do this before putting into service or allowing anyone to approach the equipment.

• Do not use hands to search for leaks on any hydraulic components. Use cardboard or similar material. Failure to do so may cause serious injury from injection of pressurized hydraulic fluid.

• When making gang adjustments, be careful to keep hands and feet clear of sliding parts and possible pinch points.

• Stop power unit and equipment immediately upon striking an obstruction. Turn off engine, remove key, inspect, and repair any damage before resuming operation.

• Before leaving operator's seat, lower the lift carriage and put attachment on the ground. Engage brake, stop engine, remove key, and remove seat belt.

MAINTENANCE

• Always wear relatively tight and belted clothing to avoid getting caught in moving parts. Wear sturdy, rough-soled work shoes and protective equipment for eyes, hair, hands, hearing, and head; and respirator or filter mask where appropriate.

• Never go underneath equipment (lowered to the ground or raised) unless it is properly blocked and secured. Never place any part of the body underneath equipment or between

MAINTENANCE (cont'd)

moveable parts even when the engine has been turned off. Hydraulic system leak down, hydraulic system failures, mechanical failures, or movement of control levers can cause equipment to drop or rotate unexpectedly and cause severe injury or death.

• When performing maintenance or repairs make sure the equipment is in the lowered

position and both the mainframe and gangs are properly blocked and secured to prevent rolling. Failure to do so can cause serious injury or death.

• Make sure attachment is properly secured, adjusted, and in good operating condition.

• Before leaving operator's seat, lower the lift carriage and put attachment on the ground. Engage brake, stop engine, remove key, and remove seat belt.

• Never perform service or maintenance with engine running.

• Keep hands and body away from pressurized lines. Use paper or cardboard, not hands or other body parts to check for leaks. Wear safety goggles. Hydraulic fluid under pressure can easily penetrate skin and will cause serious injury or death.

• Air in hydraulic systems can cause erratic operation and allows loads or equipment components to drop unexpectedly. When connecting equipment or hoses or performing any hydraulic maintenance, purge any air in hydraulic system by operating all hydraulic functions several times. Do this before putting into service or allowing anyone to approach the equipment.

• Route hydraulic hoses carefully to prevent damage. Hoses must not be twisted, bent sharply, kinked, frayed, pinched, or come into contact with any moving parts. Operate moveable components through full operational range to check clearances. Replace any damaged hose immediately.

• Do not connect a low-pressure hydraulic hose into a high-pressure system—it will burst the hose. Do not use a high-pressure hose in place of a low pressure hose—it is possible to rupture the valve.

• Make sure that all operating and service personnel know that if hydraulic fluid penetrates skin, it must be surgically removed as soon as possible by a doctor familiar with this form of injury or gangrene, serious injury, or death will result.

CONTACT A PHYSICIAN IMMEDIATELY IF FLUID ENTERS SKIN OR EYES. DO NOT DELAY.

• Keep all persons away from operator control area while performing adjustments, service, or maintenance.

• Tighten all bolts, nuts, and screws to torque chart specifications (page 14). Check that all cotter pins are installed securely to ensure equipment is in a safe condition before putting unit into service.

STORAGE

• Block equipment securely for storage in the lowered position.

• Keep children and bystanders away from storage area.

TME SERIES DISC
PARTS CATALOG

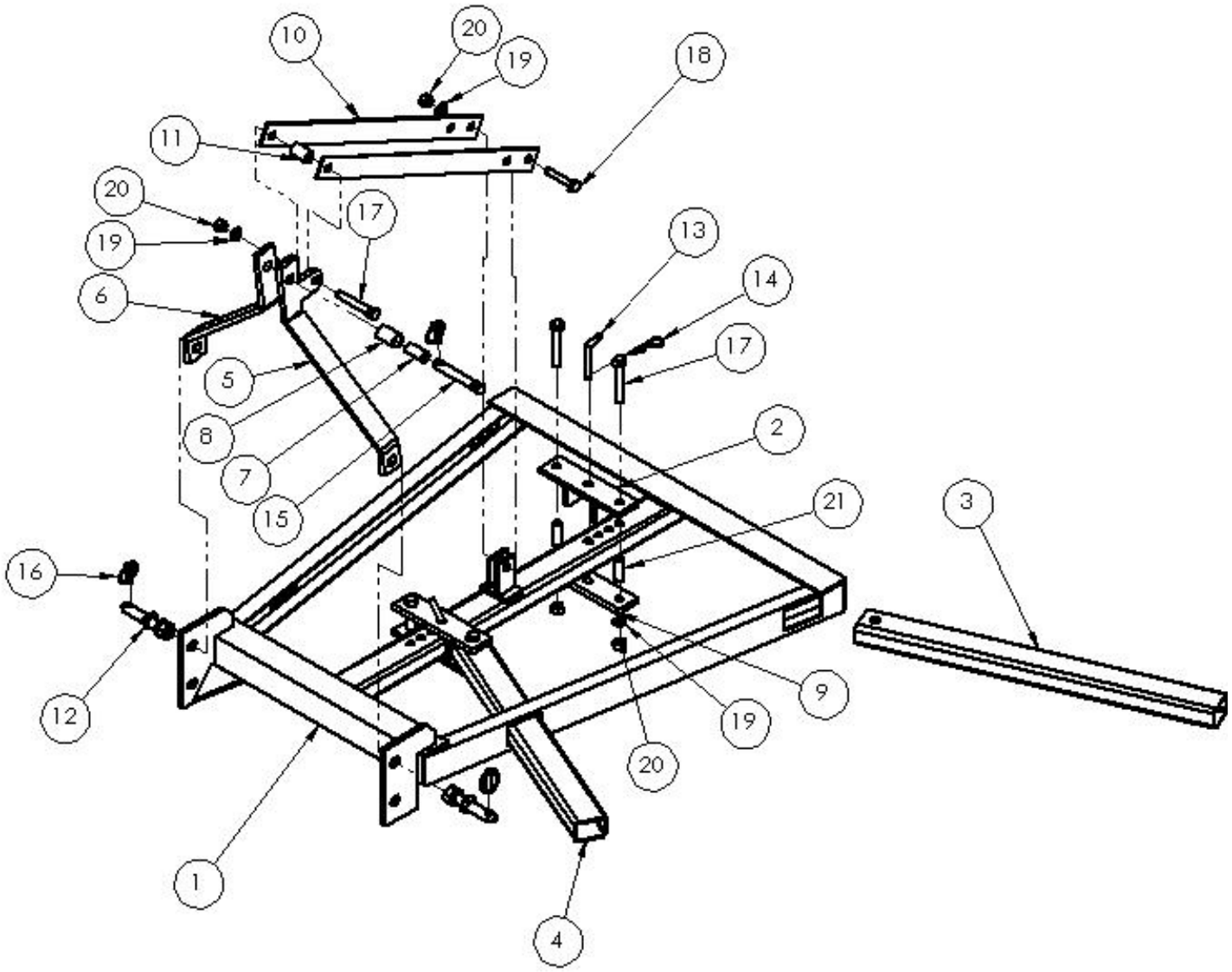

TME SERIES DISC
PARTS CATALOG

ITEM NO.	PART NUMBER	DESCRIPTION	QTY.
1	15814	TME NEW FRAME	1
2	15815	TOP SLIDE PLATE	2
3	T-621	27" GANG BEAM	*MS*
	T-623	33" GANG BEAM	*MS*
	T-624	37" GANG BEAM	*MS*
4	T-620	24" GANG BEAM	*MS*
	14558	29" GANG BEAM	*MS*
	T-623	33" GANG BEAM	*MS*
5	14991	A-FRAME 2" LH	1
6	14990	A-FRAME 2" RH	1
7	15209	CAT 1 BUSHING, 1 15/16"	1
8	15210	CAT 2 BUSHING, 1 15/16"	1
9	15098	BOTTOM SLIDE PLATE	2
10	15816	STRUT	2
11	15204	STRUT SPACER	1
12	T-33	HITCH PIN, CAT 1 W/NUT & WASHER	2
13	15094	ANGLE ADJUSTING PIN	2
14	9979	COTTOR HAIR PIN	2
15	15206	CAT 1 TOP LINK PIN	1
16	VP252	LYNCH PIN	3
17	T-724	HEX BOLT	5
18	9651	HEX BOLT, 5/8" X 3" GR. 2	1
19	T-24	LOCK WASHER, 5/8"	6
20	T-22	HEX NUT, 5/8"	6
21	T-561	5/8" X 2 1/16" BUSHING	4

MS - MODEL SPECIFIC

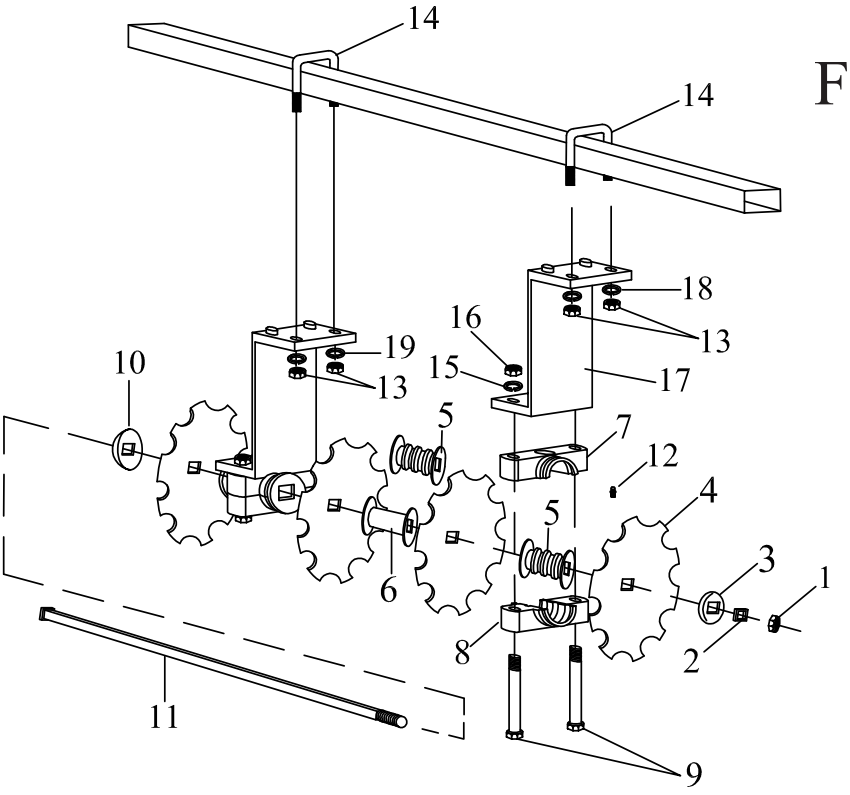

FIG. 1

1" FRICTION GANG ASSEMBLY

REF#	PART #	DESCRIPTION
1	10332	1" LOCK NUT
2	T-34	1" LOCKING WASHER
3	13422	1" SQ, END WASHER
4		DISC BLADES (SPECIFY SIZE)
5	13419	BEARING SPOOL, 1" SQ.X7 1/2" SPACING
6	13424	SPACER SPOOL, 1" SQ.X 7 1/2" SPACING
7	13420	TOP CAP 7 1/2" SPOOL
8		BOTTOM CAP 7 1/2" SPOOL
9	12179	1/2" X 5" GR.2 HEX HEAD BOLT
10	13423	1" SQ. BUMPER WASHER
11	13429	1" SQ. X 25 3/4"AXLE (4 BLADE X 7 1/2" SPACING)
	13430	1" SQ. X 33 1/4"AXLE (5 BLADE X 7 1/2" SPACING)
12	9413	1/4" GREASE FITTING
13	T-22	5/8" LOCK NUT
14	12028	5/8"X2"X3" U-BOLT
15	T-25	1/2" LOCKING WASHER
16	T-26	1/2" HEX NUT
17	13436	GANG HANGER TME/F
18	T-24	5/8" LOCKING NUT

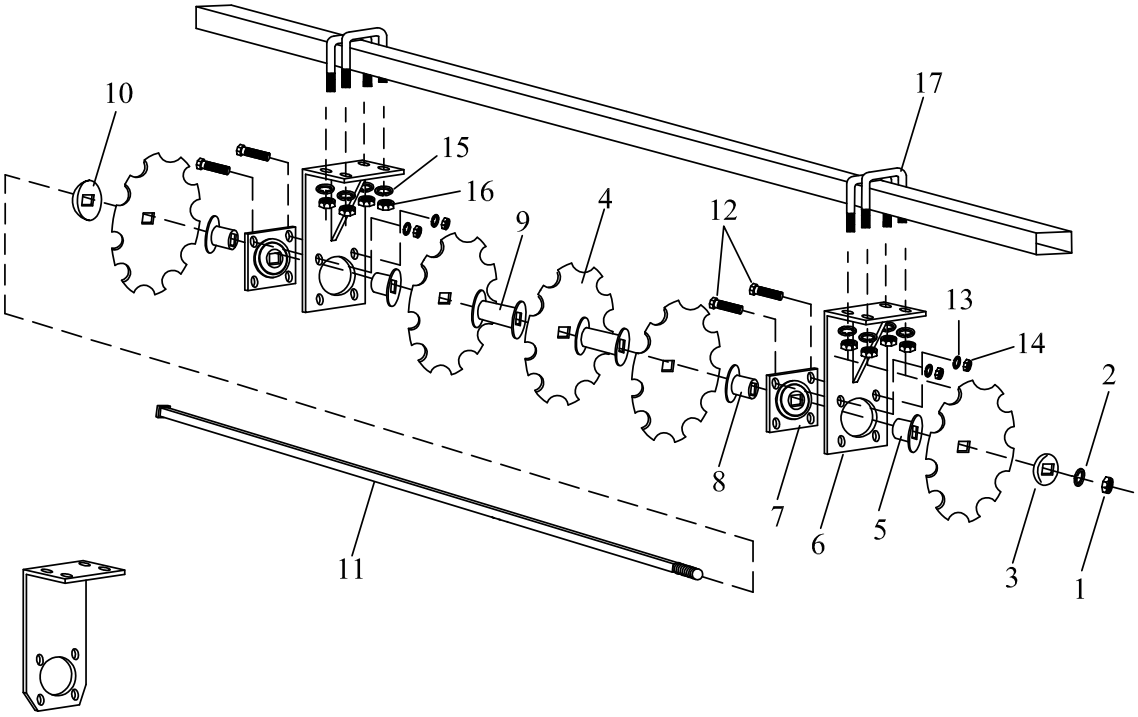

for units with a serial # lower than #18465

1TME/BF
1" FLANGE GANG ASSEMBLY

REF#	PART #	DESCRIPTION
1	10332	1" LOCK NUT
2	T-34	1" LOCKING WASHER
3	13422	1" END WASHER
4		DISC BLADES (SPECIFY SIZE)
5	13426	1"X 2 3/4" END SPACER
6	14419	BF GANG HANGER W/BRACE
7	13689	1" SEALED FLANGETTE BEARING ASSEMBLY
8	13428	1" X 5 1/8" END SPACER FOR 9" SPACING
	13427	1" X 3 5/8" END SPACER FOR 7 1/2" SPACING
9	13425	SPACER SPOOL, 1" X 9"
	13424	SPACER SPOOL, 1" X 7 1/2"
10	13423	1" BUMPER WASHER
11	13429	1" X 25 3/4" AXLE (4 BLADE X 7 1/2" SPACING)
	13433	1" X 30 5/8" AXLE (4 BLADE X 9" SPACING)
	13430	1" X 33 1/4" AXLE (5 BLADE X 7 1/2" SPACING)
12	T-804	1/2" X 1 1/2" GR.2 CARRIAGE BOLT
13	T-25	1/2" LOCKING WASHER
14	T-26	1/2" HEX NUT
15	T-24	5/8" LOCKING WASHER
16	T-22	5/8" HEX NUT
17	12028	5/8" U-BOLT (3" X 2" GANG BEAM)

Operation

Safety is a primary concern in the design and manufacture of our products. Unfortunately, our efforts to provide safe equipment can be wiped out by an operator's single careless act.

In addition to the design and configuration of equipment, hazard control and accident prevention are dependent upon the awareness, concern, judgement, and proper training of personnel involved in the operation, transport, maintenance and storage of equipment.

It has been said "The best safety device is an informed, careful operator."We ask you to be that kind of operator.

The operator is responsible for the safe operation of this equipment. The operator must be properly trained. Operators should be familiar with the equipment, the tractor, and all safety practices before starting operation. Read the safety rules and safety decals on pages 2-6.

Owner should check and tighten all hardware after the first hour of operation. The break in stage of your new disc harrow can cause minimal loosening of disc gangs and other hardware as the new paint wears. Please see Bolt Torque Chart (page 12) for proper torque information.

⚠ WARNING

• Power unit must be equipped with ROPS or ROPS cab and seat belt. Keep seat belt securely fastened. Falling off power unit can result in death from being run over or crushed. Keep foldable ROPS systems in "locked up" position at all times.

• Never allow children or untrained persons to operate equipment.

• Keep bystanders away from equipment.

• NEVER GO UNDERNEATH EQUIPMENT. Never place any part of the body underneath equipment or between moveable parts even when the engine has been turned off. Hydraulic system leak down, hydraulic system failures, mechanical failures, or movement of control levers can cause equipment to drop or rotate unexpectedly and cause severe injury or death.

• Service work does not require going underneath.

• Read Manual for service instructions or have service performed by a qualified dealer.

• Stop tractor and implement immediately upon striking an obstruction. Turn off engine, remove key, inspect, and repair any damage before resuming operation.

• Always wear relatively tight and belted clothing to avoid entanglement in moving parts. Wear sturdy, rough-soled work shoes and protective equipment for eyes, hair, hands, hearing, and head.

Owner/Operator Pre-Operation Checklist

(Owner's/Operator's Responsibility)

____ Review and follow all safety rules and safety decal instructions on page 2 through page 6.

____ Check that equipment is properly and securely attached to tractor.

____ Check that all safety decals are installed and in good condition. Replace if damaged.

____ Check that all hardware is properly installed and secured.

____ Do not allow riders.

____ Make sure tractor ROPS or ROPS CAB and seat belt are in good condition. Keep seat belt securely fastened during operation.

Adjusting Gang Angle

⚠ CAUTION

When making gang adjustments, be careful to keep hands and feet clear of sliding parts and possible pinch points.

The gang angles on the TME series disc are adjustable. The unit should be lifted two to three inches off the ground with the tractor hitch system for an easier adjustment. Remove cotter key and then pin and set angle at the desired setting. Make sure that the pin and cotter key is replaced properly after setting to secure the gang angles. (See photos below)

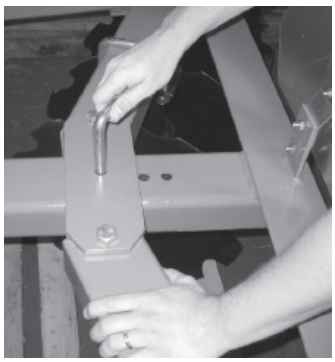

It is important that only one adjustment be made at a time and then tried between each adjustment. Remember each adjustment affects another; therefore, extreme care should be used when adjusting.

Each trial run should be made with the tractor in the same gear and approximately the same RPM. Changing discing speed while attempting to adjust will result in excessive time and labor loss due to changing conditions.

While making your initial run, observe the disc closely as it is traveling. It should be level from the front to rear as it travels. If not, level it by adjustment of your tractor top link. After making the necessary adjustment, the disc should pull level with both front and rear gangs penetrating the soil at approximately the same depth.

Now observe the soil behind the disc. It should be level and smooth. If after making the above adjustments, the disc leaves a water furrow in the center, it would indicate that the front gangs are more aggressive than the rear gangs. To correct this, either increase the angle of the rear gangs or decrease the angle of the front gangs. Conversely, if the disc is ridging, that is leaving a ridge behind it, this would indicate that the rear gang is more aggressive than the front gang. To correct this, either decrease the angle of the rear gang or increase the angle of the front gangs.

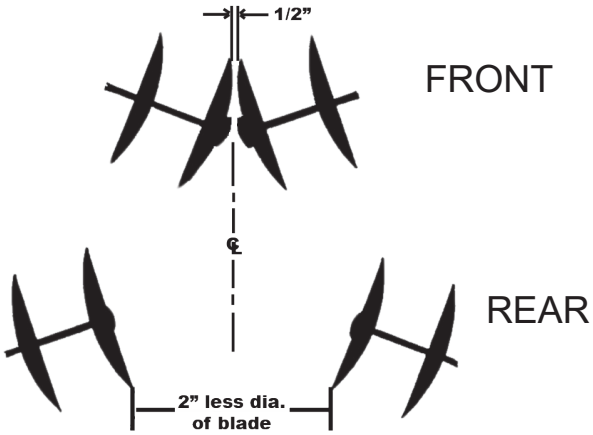

Owner Service

WARNING

• NEVER GO UNDERNEATH EQUIPMENT. Never place any part of the body underneath equipment or between moveable parts even when the engine has been turned off. Hydraulic system leak down, hydraulic system failures, mechanical failures, or movement of control levers can cause equipment to drop or rotate unexpectedly and cause severe injury or death.

• Service work does not require going underneath.

• Read Manual for service instructions or have service performed by a qualified dealer.

WARNING

The information in this section is written for operators who possess basic mechanical skills. If you need help, your dealer has trained service technicians available. For your protection, read and follow the safety information in this manual.

• Keep all persons away from operator control area while performing adjustments, service, or maintenance.

• Before dismounting power unit or performing any service or maintenance, follow these steps: disengage power to equipment, lower the 3 point hitch and all raised components to the ground, operate valve levers to release any hydraulic pressure, set parking brake, stop engine, remove key, and unfasten seat belt.

CAUTION

• Always wear relatively tight and belted clothing to avoid entanglement in moving parts. Wear sturdy, rough-soled work shoes and protective equipment for eyes, hair, hands, hearing, and head.

Gang Assembly for Maintenance

WARNING

• When performing maintenance or repairs make sure the equipment is in the lowered position and both the mainframe and gangs are properly blocked and secured to prevent rolling. Failure to do so can cause serious injury or death.

When gang component replacement is required, carefully observe all safety issues. Place unit on level ground prior to gang drop. Also make sure that gangs are blocked to keep them from rolling in either direction. After unit is lowered to ground and gangs are secure, loosen nuts on all hex bolts holding hangers to main frame (item 10). Observe the sequence and location of each gang component and refer to the gang diagram on Figure 1 for removal and replacement of the desired component. After replacement is completed reinstall gang parts in proper order as shown on gang diagram on Figure 1. Make sure that the gang nut on the gang axle is properly tightened after replacements are made. Refer to " Bolt Tightening Torque Chart" on page 16 for proper torque.

Storage

When storing your disc harrow make sure the unit is placed on level ground and that the gangs are properly chocked by bracing with 6"x6" blocks on the front and rear side of one complete gang assembly. See the diagram below.

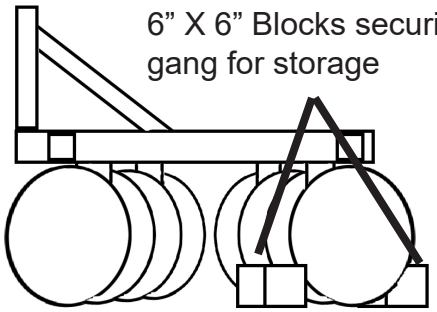

Bolt Size Chart

NOTE: Chart shows bolt thread sizes and corresponding head (wrench) sizes for standard SAE and metric bolts.

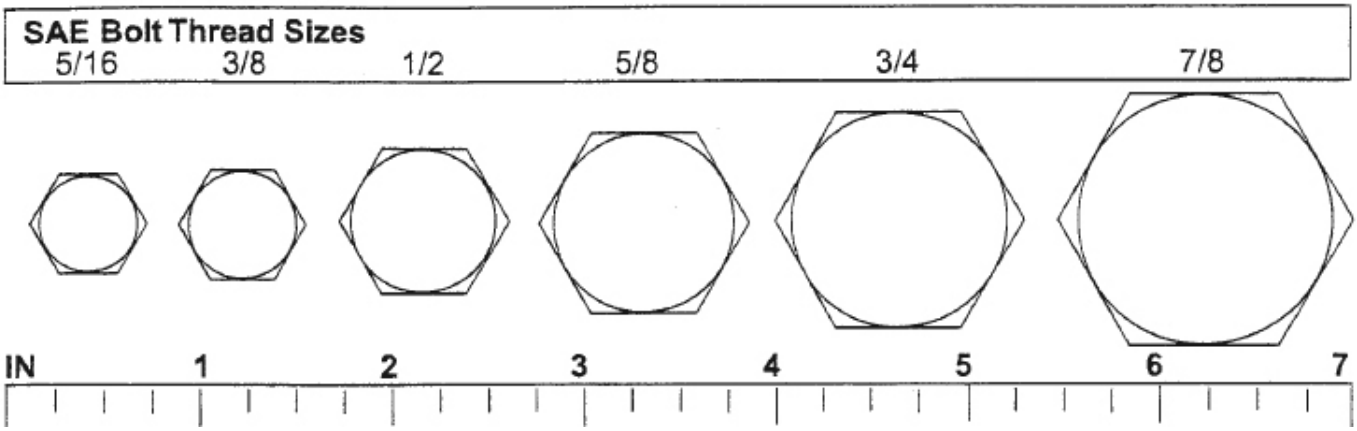

SAE Torque Chart

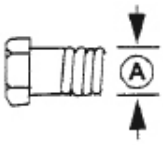

SAE SERIES TORQUE CHART

SAE Grade 2 (No Dashes)

SAE Bolt Head Identification

SAE Grade 5 (3 Radial Dashes)

SAE Grade 8 (6 Radial Dashes)

(A) Diameter (Inches)	Wrench Size	MARKING ON HEAD					
		SAE 2		SAE 5		SAE 8	
		lbs-ft	N-m	lbs-ft	N-m	lbs-ft	N-m
1/4"	7/16"	6	8	10	13	14	18
5/16"	1/2"	12	17	19	26	27	37
3/8"	9/16"	23	31	35	47	49	67
7/16"	5/8"	36	48	55	75	78	106
1/2"	3/4"	55	75	85	115	120	163
9/16"	13/16"	78	106	121	164	171	232
5/8"	15/16"	110	149	170	230	240	325
3/4"	1-1/8"	192	261	297	403	420	569
7/8"	1-5/16"	306	416	474	642	669	907
1"	1-1/2"	467	634	722	979	1020	1383

DH13 Series gang bolt torque 795 lbs-ft 1080 N-m

Gang Adjustment Trouble Shooting

1. Unit not tracking or is fishtailing	A. Adjust top link to increase weight on the rear of the disc. B. Disc assembled incorrectly. Refer to assembly instructions.
2. Unit not tracking: skipping, jumping, and fishtailing (in untilled, hard soil)	A. Insure equal cut or depth on front and rear. B. Reduce speed. C. Reduce gang angle. D. Reduce depth of cut by carring on 3 point lift discing shallow the first time over. NOTE: Some experimentation may be required by trial and error to arrive at proper solution.
3. Unit leaving water furrow in center.	A. Increase speed. B. Increase angle on rear gangs. C. Decrease angle on front gangs. D. Disc not level. Lower rear gangs or raise front gangs. E. Any combination of the above.
4.Unit ridging or leaving behind a high spot in center of machine.	A. Decrease speed. B. Decrease angle on rear gangs. C. Increase angle on front gangs. D. Disc not level. Raise rear gangs or lower front gangs. E. Any combination of the above

WARRANTY

Please enter information below and save for future reference:

Date Purchase:_____From (Dealer):_____
Model Number: _____ Serial Number: _____

Tar River Manufacturing Co., Inc. ("Tar River") warrants this product to be free from defect in material and workmanship. Except as otherwise set forth below, the duration of this Warranty shall be for SIX (6) MONTHS COMMENCING ON THE DATE OF DELIVERY OF THE PRODUCT TO THE ORIGINAL PURCHASER.

Under no circumstances will this Warranty apply in the event that the product, in the good faith opinion of Tar River, has been subjected to improper operation, improper maintenance, misuse, or an accident. This Warranty does not apply in the event that the product has been materially modified or repaired by someone other than Tar River, a Tar River authorized dealer or distributor, and/or a Tar River authorized service center. This Warranty does not cover normal wear or tear, or normal maintenance items. This Warranty also does not cover repairs made with parts other than those obtainable through Tar River.

This Warranty is extended solely to the original purchaser of the product. Should the original purchaser sell or otherwise transfer this product to a third party, this Warranty does not transfer to the third party purchaser in any way. There are no third party beneficiaries of this Warranty.

Tar River makes no warranty, express or implied, with respect to cutting edges, shanks, tires or other parts or accessories not manufactured by Tar River. Warranties for these items, if any, are provided separately by their respective manufacturers.

Monroe-Tufline's obligation under this Warranty is limited to, at Monroe-Tufline's option, the repair or replacement, free of charge, of the product if Tar River, in its sole discretion, deems it to be defective or in noncompliance with this Warranty. Such parts shall be provided by the selling dealer to the user during regular working hours. If requested, the product must be returned to Tar River with proof of purchase within thirty (30) days after such defect or noncompliance is discovered or should have been discovered, routed through the dealer and distributor from whom the pur-chase was made, transportation charges prepaid. Tar River shall complete such repair or replacement within a reasonable time after Tar River receives the product. THERE ARE NO OTHER REMEDIES UNDER THIS WARRANTY. THE REMEDY OF REPAIR OR REPLACEMENT IS THE SOLE AND EXCLUSIVE REMEDY UNDER THIS WARRANTY.

THERE ARE NO WARRANTIES WHICH EXTEND BEYOND THE DESCRIPTION ON THE FACE OF THIS WARRANTY. Tar River MAKES NO OTHER WARRANTY, EXPRESS OR IMPLIED, AND Tar River SPECIFICALLY DISCLAIMS ANY IMPLIED WARRANTY OF MERCHANTABILITY AND/OR ANY IMPLIED WARRANTY OF FITNESS FOR A PARTICULAR PURPOSE (EXCEPT WHERE PROHIBITED BY LAW).

Tar River shall not be liable for any incident or consequential losses, damages or expenses, arising directly or indi-rectly from the product, whether such claim is based upon breach of contract, breach of warranty, negligence, strict liability in tort or any other legal theory. Monroe-Tufline's obligation under this warranty, to the extent allowed by law, is in lieu of all warranties, implied or expressed for a particular purpose and any liability for incidental and consequen-tial damages with respect to the sale or use of the items warranted. Such incidental and consequential damages shall include but not be limited to: transportation charges other than normal freight charges; loss of crops or any other loss of income; rental of substitute equipment, expenses due to loss, damage, detention or delay in the delivery of equipment or parts resulting from acts beyond the control of Tar River.

This Warranty is subject to any existing conditions of supply which may directly affect Monroe-Tufline's ability to obtain materials or manufacture replacement parts.

No agent, representative, dealer, distributor, serviceperson, salesperson, or employee of any company, including without limitation, Tar River, its authorized dealers, distributors, and service centers, is autho-rized to alter, modify, or enlarge this Warranty.

This Warranty is subject to the warranty registration being submitted. For warranty services, contact your selling dealer.

WARRANTY FOR PARTS

Tar River Manufacturing Co., Inc. ("Tar River") warrants its parts to be free from defect in material and workmanship for a period of ninety (90) days from the date of delivery of the part(s) to the original purchaser.

Replacement or repair parts installed in the equipment covered by warranty are warranted for ninety (90) days from date of purchase of such part or to the expiration of the applicable new equipment warranty period, which-ever occurs later.

Under no circumstances will this Warranty apply in the event that the product the parts are installed in, in the good faith opinion of Tar River, has been subjected to improper operation, improper maintenance, mis-use, or an accident. This Warranty does not cover normal wear or tear, or normal maintenance items.

This Warranty is extended solely to the original purchaser of the product. Should the original purchaser sell or otherwise transfer this product to a third party, this Warranty does not transfer to a third party purchaser in any way. There are no third party beneficiaries of this Warranty.

Monroe-Tufline's obligation under this Warranty is limited to, at Monroe-Tufline's option, the repair or replacement, free of charge, of the product if Tar River, in its sole discretion, deems it to be defective or in noncompliance with this Warranty. The selling dealer shall provide such parts to the user during regular work-ing hours. If requested, the product must be returned to Tar River with proof of purchase within thirty (30) days after such defect or noncompliance is discovered or should have been discovered, routed through the dealer and distributor from whom the purchase was made, transportation charges prepaid. Tar River shall complete such repair or replacement within a reasonable time after Tar River receives the product. THERE ARE NO OTHER REMEDIES UNDER THIS WARRANTY. THE REMEDY OF REPAIR OR REPLACEMENT IS THE SOLE AND EXCLUSIVE REMEDY UNDER THIS WARRANTY.

THERE ARE NO WARRANTIES WHICH EXTEND BEYOND THE DESCRIPTION ON THE FACE OF THIS WARRANTY. Tar River MAKES NO OTHER WARRANTY, EXPRESS OR IMPLIED, AND Tar River SPECIFICALLY DISCLAIMS ANY IMPLIED WARRANTY OF MERCHANTABILITY AND/OR ANY IMPLIED WARRANTY OF FITNESS FOR A PARTICULAR PURPOSE (EXCEPT WHERE PROHIBITED BY LAW).

Tar River shall not be liable for any incidental or consequential losses, damages or expenses, arising directly or indirectly from the product, whether such claim is based upon breach of contract, breach of warranty, negligence, strict liability in tort or any other legal theory. Without limiting the generality of the foregoing, Tar River specifically disclaims any damages relating to (i) lost profits, business, revenues or goodwill; (ii) loss of crops; (iii) loss because of delay in harvesting; (iv) any expense or loss incurred for labor, supplies, substitute machinery or rental; or (v) any other type of damage to property or economic loss.

This Warranty is subject to any existing conditions of supply which may directly affect Monroe-Tufline's ability to obtain materials or manufacture replacement parts.

No agent, representative, dealer, distributor, service person, salesperson, or employee of any company, includ-ing without limitation, Tar River, its authorized dealers, distributors, and service centers, is authorized to alter, modify, or enlarge this Warranty.

For warranty services, contact your selling dealer.

Warranty Registration is done online.

Please log onto:

tarrivermfg.com

Distributed by:

BELC Resources Equipment

Increasing agricultural productivity since 1974

**P.O.
Box 8164
Rocky Mount, NC 27804**

**Tel: 252-442-0700
Fax: 252-442-0787
Sales@BRGlimited**