MINI ROUND BALER

M50 Miniroto

sitrex®
your partner in farming

MINI ROUND BALER

M50 Miniroto

M50 is a machine that can be used with small, low-power tractors thanks to its light weight. **It is suitable for mountainous areas and steep slopes and can access narrow passageways**. It allows for tight manoeuvring during use. It has an excellent harvesting capacity. **The bales can be easily adjusted in terms of density, thus allowing for easy manual handling**. It can bale hay, straw and green produces effortlessly.

Its compact size makes this machine suitable for any type of use and any terrain. **The machine can be supplied with a three-point hitch or with a drawbar adjustable in length and height**.

With the drawbar, the machine can be fitted with raking finger wheels that facilitate harvesting over wider swaths. The machine's track width can be adjusted according to the available passage where it is used. **The machine is equipped with a double harvester balancing system and an adjustable harvester wheel that allows** the user to keep it at the desired distance from the ground. The machine is equipped with many safety bolts to preserve each functional part. It can be supplied with a net knotter or a twine knotter depending on the material to be baled.

STANDARD EQUIPMENT

- Hydraulic tailgate opening and mechanical closing
- Variable track width
- Automatic single-wire knotter with acoustic warning or net knotter with acoustic warning
- Bale spacer
- Bale counter
- Double harvester balancing
- Central drawbar with drawbar extension or 3-point hitch
- Cardan shaft
- Rake wheels (only with machine equipped with central drawbar and drawbar extension)
- Adjustable harvesting wheel

OPTIONAL

- Independent hydraulic pump
- Side drawbar kit
- Hydraulic harvester lift kit
- Electrical control for net binding

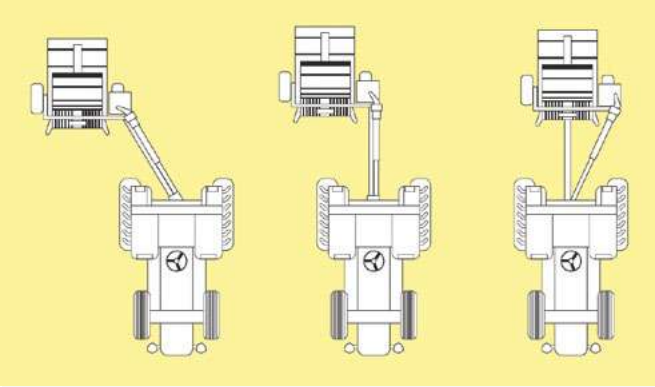

The movable drawbar makes it possible to connect the machine in the three different ways shown in the diagram.

Specifications	M50 MINIBROKEN
Bale tie	twine / net
Bale size	cm 50x70 / in 19.7x27.5
Hay bale weight	kg 18÷25 / lb 40÷55
Pick-up width	cm 85 / lb 33.4
Power required	CV 18 / in 18
Dim.: width x length x height	cm 130x150x130 / in 51.2x59x51.2
Dim.: (lateral drawbar) width x length x height	cm 147x180x130 / in 57.8x70.8x51.2
Weight	kg 380 / lb 844
Weight (lateral drawbar)	Kg 490 / lb 1089

Designs, materials and/or specifications are subject to change without notice and without liability thereof.

Your partner in farming

sitrex®
your partner in farming

MEMBER FEDER UNACOMA

FARM EQUIPMENT MANUFACTURERS ASSOCIATION

ACCREDIA · LENTE DI ACCREDITAMENTO ·

ISO 9001 CERTIFICATION intertek™

Organization with certified Management System ISO 9001

Viale Grecia, 22 - 06018 Trestina (PG) - ITALY | **Phone**: +39 075.854.00.21 | **Email**: sitrex@sitrex.it | **www.sitrex.com**