RTA20 & RTR20 Series

Specifications and Capacities		
Model Numbers	**RTA2072**	**RTR2072**
Weight	734 lbs (333 kgs)	795 lbs (361 kgs)
Recommended power take-off horsepower	23-75 hp (17-56 kW)	
Tilling width	72" (1.83 m)	
Overall width	77 7/8" (1.98 m)	
3-Point hitchtType	Category I, Adjustable Lower Hitch Clevis with Plated Pins Fits Lnd Pride Quick Hitch	
Sideshift capabilities	18" (45.7 cm)	
	Note: Limited sideshift capabilities with Land Pride Quick Hitch	
Number of flanges	9	
Number of tines per flange	6	
Tine construction	Alloy steel heat treated “C” shaped blades	
Skid shoes	Adjustable	
Storage stands	Adjustable	
Rear deflector	Adjustable profile stamped rear deflector	
Driveline	ASAE Category III Heavy Duty Off-Center Shear bolt - standard Slip Clutch - optional	
Gearbox	75 hp (56 kW) Input at 540 rpm 1.46:1 Ratio Cast Iron Housing, Straight Bevel Gears	
Gearbox Lubrication type **Lubrication capacity**	SAE80-90W EP oil 2.2 Pints (1.04 L)	
Drive Chain	#80 Roller chain - Fully enclosed in oil bath with drain & fill plugs	
Chaincase Lubrication type **Lubrication capacity**	Shell Gadus S2 V2200 00 flowable grease or equivalent 32 oz (0,95 L)	
Sprockets	Splined Bores	
Rotary bearing mounts	Machined Cast Iron	
Rotor swing diameter	17" (43.2cm)	
Rotor shaft speed	220 rpm at 540 rpm power take-off speed	
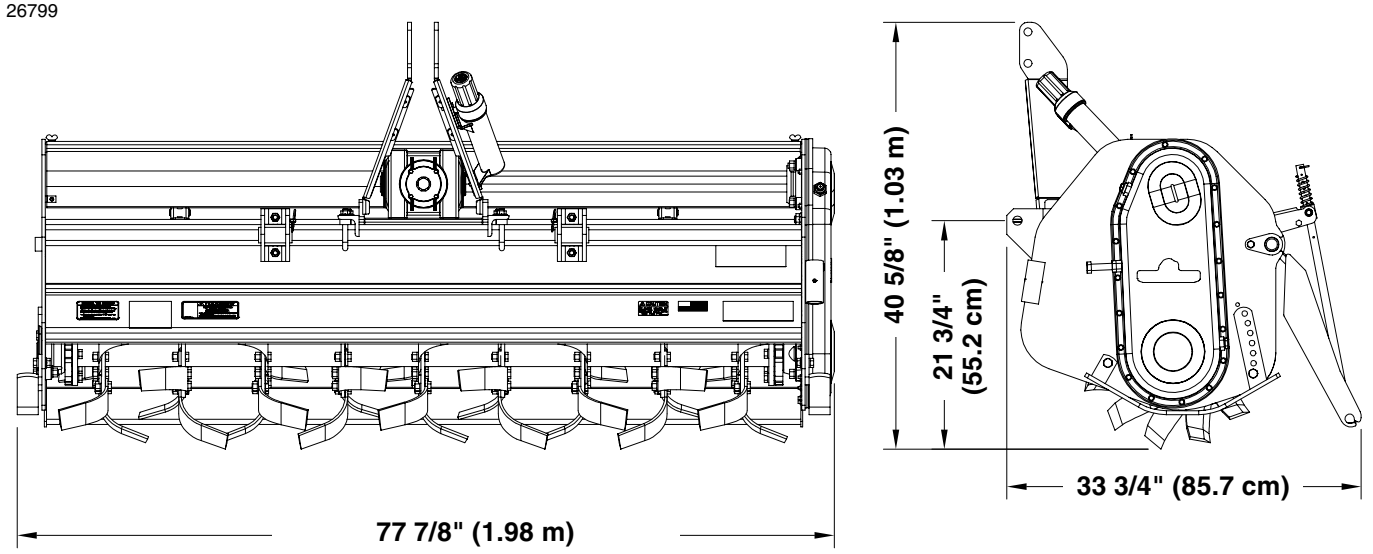
26799